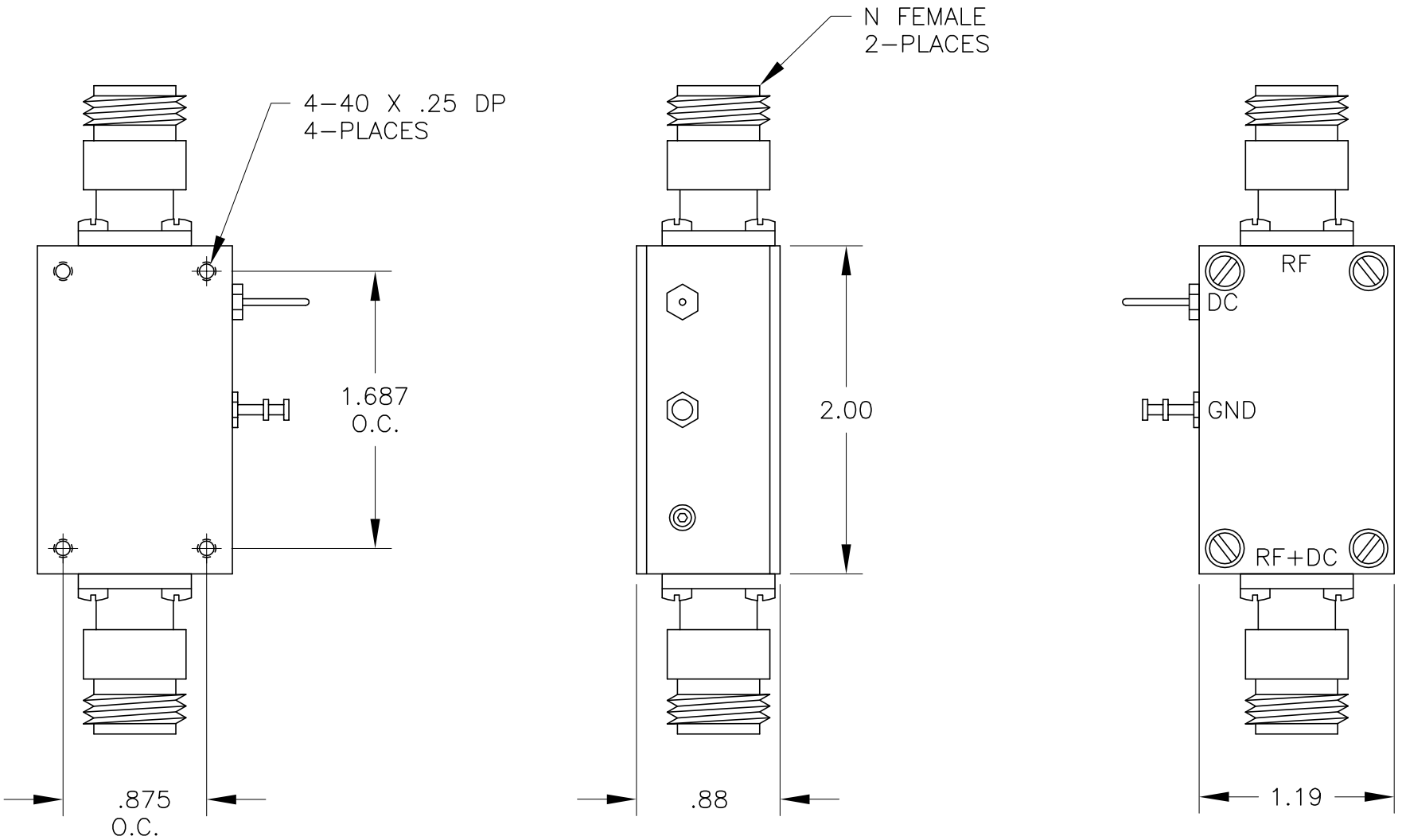

JFW INDUSTRIES, INC.

INDIANAPOLIS, IN

REV	ECN	DATE	BY
A	5960	11-9-98	TEZ
B	5980	4-5-99	PT
C	10788	3-9-05	LT

DRAWN BY	PAUL TACKETT	DATE	4-5-99
APP'D BY		SCALE	FULL
MATERIAL	BRASS		
FINISH	NICKEL		
DESCRIPTION	50BT-XXX: BIAS TAP		

PROPRIETARY INFORMATION

ALL SURFACES ARE TO BE FREE OF BURRS, PITS, & SCRATCHES

TOLERANCES

FRACTIONAL DIM. ± 1/64

2 PLACE DECIMAL ± .010

3 PLACE DECIMAL ± .005

ANGULAR DIM. ± 1/2°

DWG NO. 092-2750