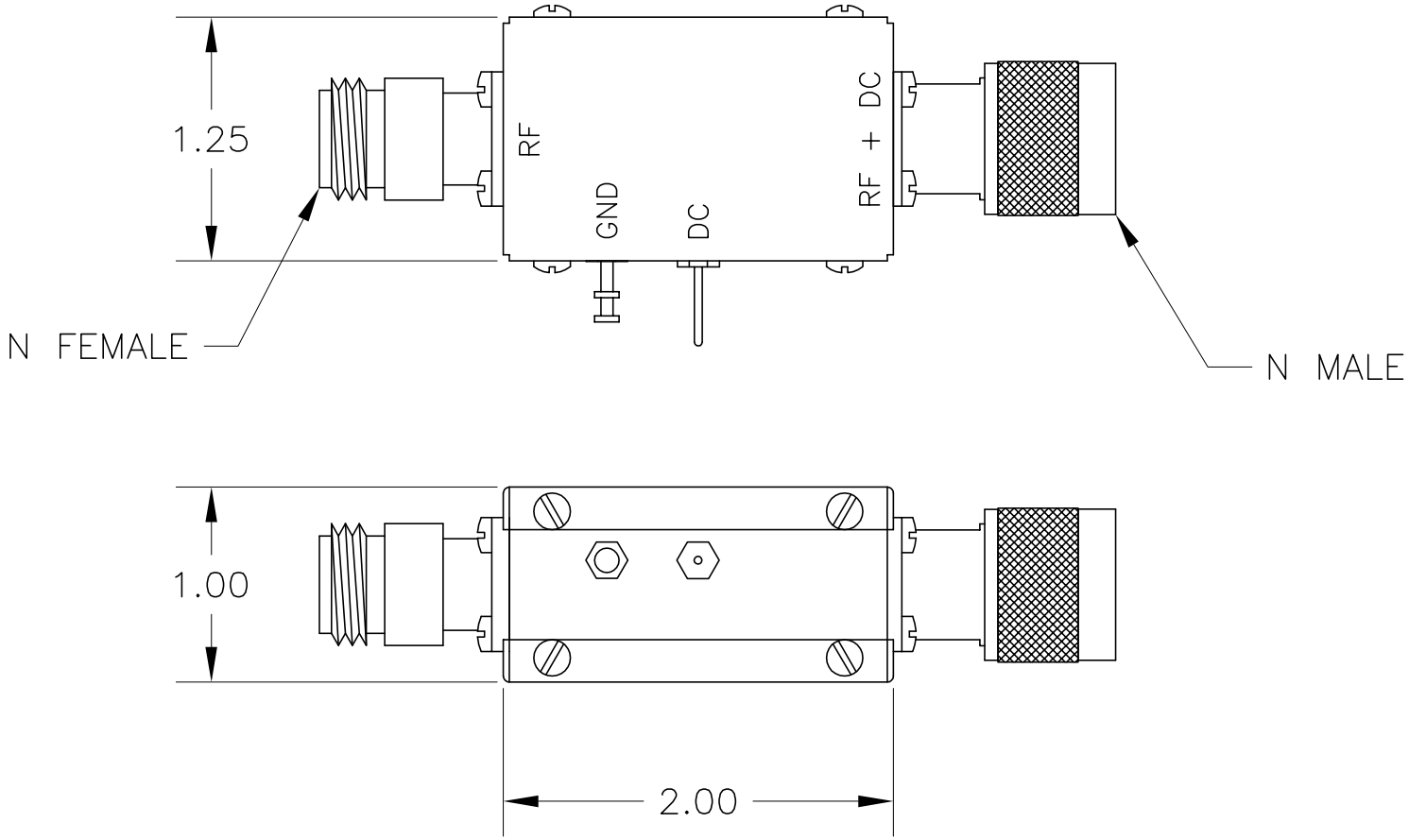

JFW INDUSTRIES, INC.
INDIANAPOLIS, IN

REV	ECN	DATE	BY
A	7283	10-31-02	TEZ
B	10790	3-10-05	LT
C	12378	1-26-06	TEZ

DRAWN BY PAUL TACKETT
DATE 12-8-98
APP'D BY
SCALE FULL
MATERIAL BRASS
FINISH NICKEL
DESCRIPTION 50BT-XXX: BIAS TAP

PROPRIETARY INFORMATION

ALL SURFACES ARE TO BE FREE OF BURRS, PITS, & SCRATCHES

TOLERANCES
FRACTIONAL DIM. ± 1/64
2 PLACE DECIMAL ±.010
3 PLACE DECIMAL ±.005
ANGULAR DIM. ± 1/2°

DWG NO. 092-2930