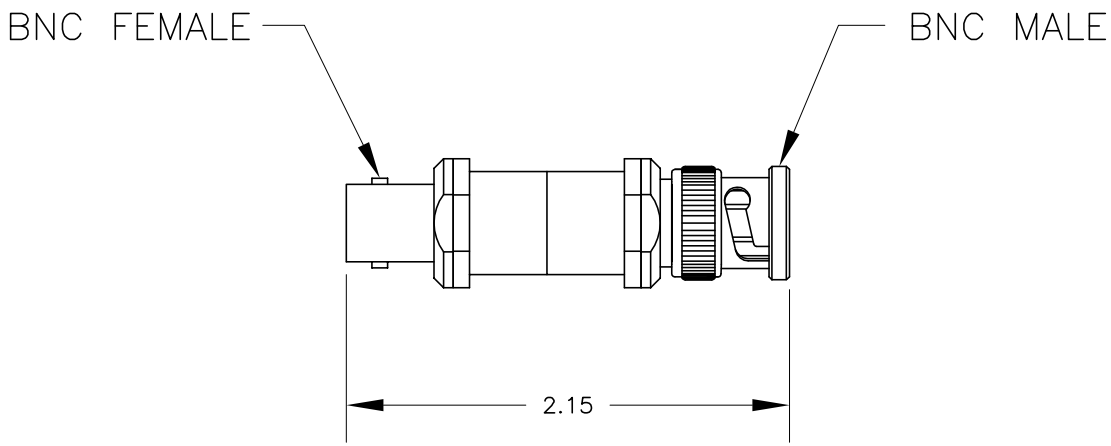

JFW INDUSTRIES, INC.
INDIANAPOLIS, IN

REV	ECN	DATE	BY
A	2083	6–20–88	TEZ
B	6914	11–27–01	MAH
C	7395	3–3–03	TEZ
D	7558	9–22–03	TEZ
E	10136	11–8–04	LT

DRAWN BY L. TABOR
DATE 11–8–04
APP'D BY
SCALE FULL
MATERIAL BRASS
FINISH NICKEL
DESCRIPTION BNC MALE/FEMALE

PROPRIETARY INFORMATION

ALL SURFACES ARE TO BE FREE OF BURRS, PITS, & SCRATCHES

TOLERANCES
FRACTIONAL DIM. ± 1/64
2 PLACE DECIMAL ± .010
3 PLACE DECIMAL ± .005
ANGULAR DIM. ± 1/2°

DWG NO. 092–429