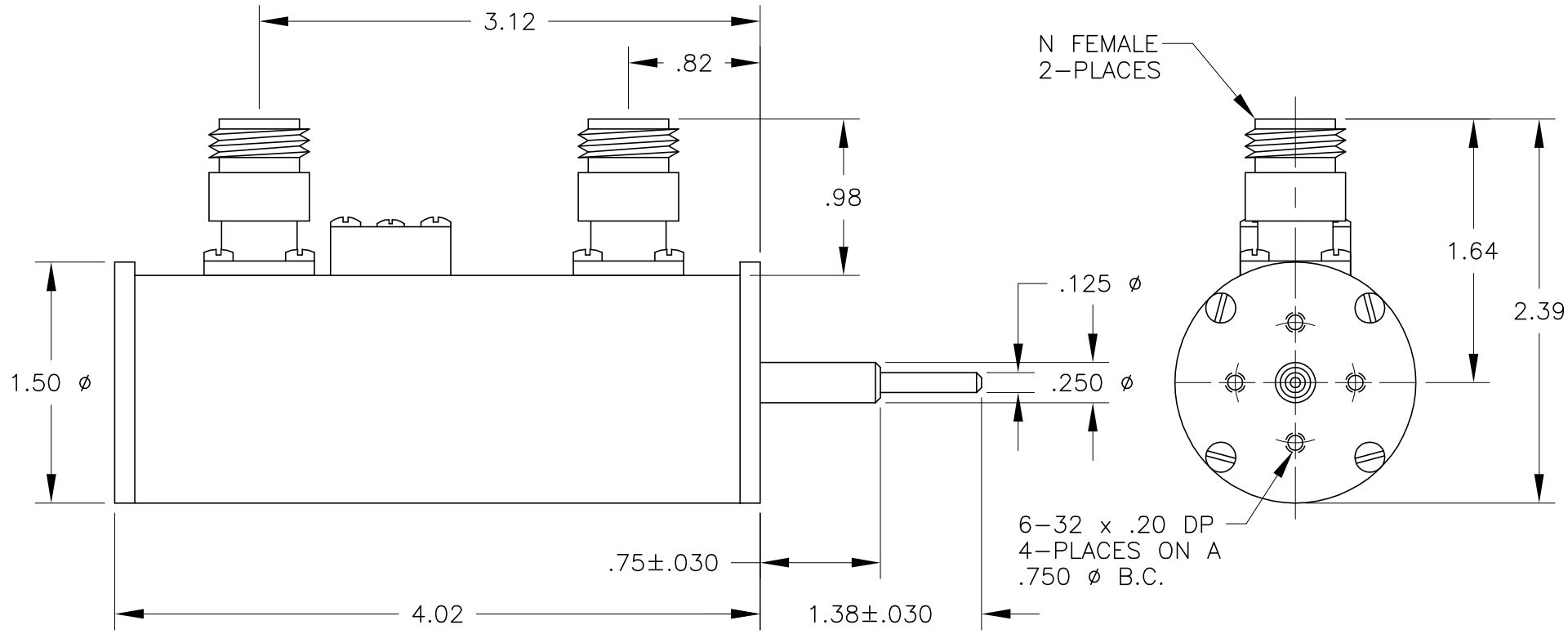

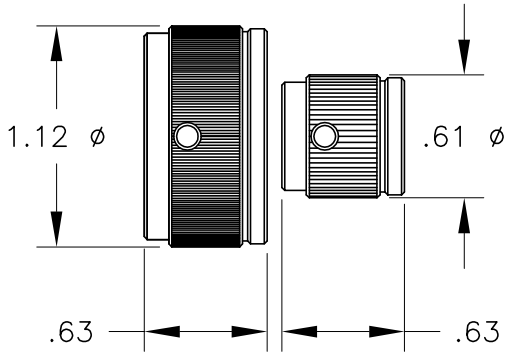

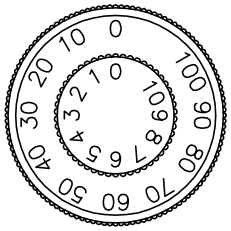

REV	ECN	DATE	BY	APPR
–	ISSUED	5–20–09	DTS	TRS

JFW INDUSTRIES, INC.

www.jfwindustries.com PH: 317–887–1340

MATERIAL: ALUMINUM ALLOY		PROPRIETARY INFORMATION
FINISH: CHEMFILM TCP		ALL SURFACES ARE TO BE FREE OF BURRS, PITS, & SCRATCHES
MODEL: 50DR–XXX	SCALE: FULL	TOLERANCES .XX±.010 .XXX±.005 XX°±.5°
DESCRIPTION: 0–110dB ROTARY ATTENUATOR		DWG #: 092–327–01