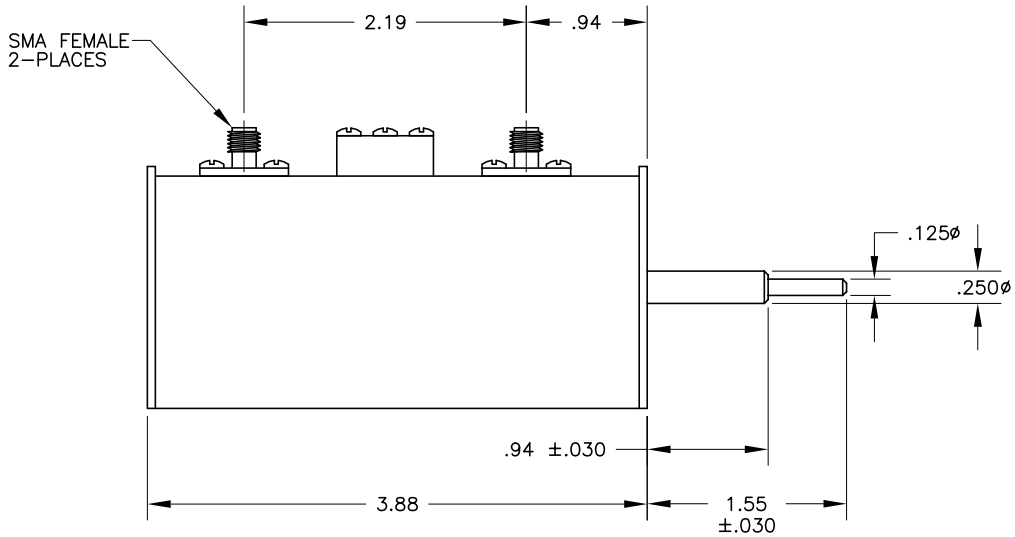

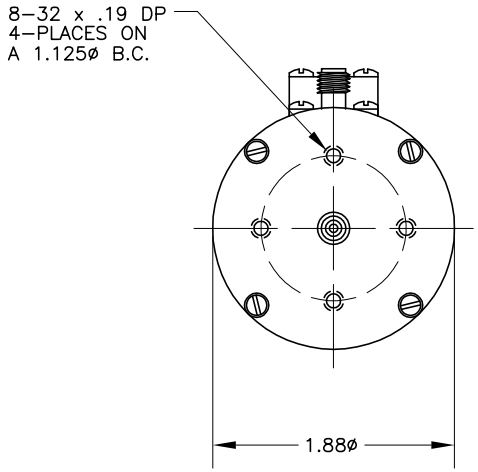

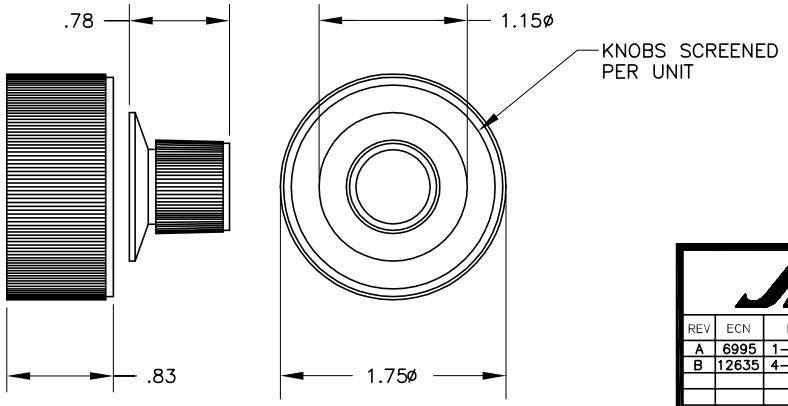

KNOB DETAIL

JFW INDUSTRIES, INC.
INDIANAPOLIS, IN

REV	ECN	DATE	BY
A	6995	1-30-02	CMB
B	12635	4-21-06	ETW

DRAWN BY: C. BRYANT
DATE: 1-30-02
APP'D BY:
SCALE: FULL
MATERIAL: ALUMINUM ALLOY
FINISH: CHEMFILM TCP
DESCRIPTION: 50DR-003: DUAL ROTOR ATTEN.

PROPRIETARY INFORMATION
ALL SURFACES ARE TO BE FREE OF BURRS, PITS, & SCRATCHES
TOLERANCES
FRACTIONAL DIM. ± 1/64
2 PLACE DECIMAL ±.010
3 PLACE DECIMAL ±.005
ANGULAR DIM. ± 1/2°
DWG NO. 092-438