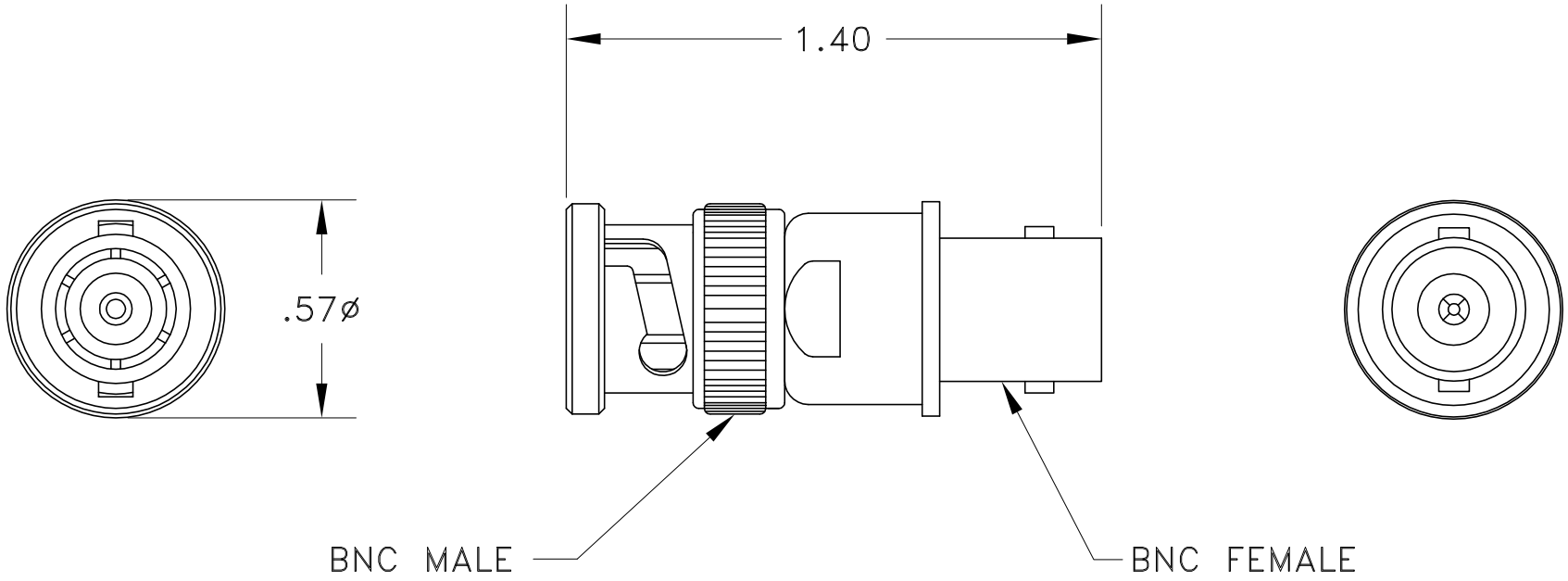

JFW INDUSTRIES, INC.
INDIANAPOLIS, IN

REV	ECN	DATE	BY
A	7641	11-14-03	TEZ

DRAWN BY CDJ
DATE 5-05-95
APP'D BY
SCALE 2x
MATERIAL BRASS
FINISH NICKEL
DESCRIPTION FEEDTHRU TERMINATION

PROPRIETARY INFORMATION

ALL SURFACES ARE TO BE FREE OF BURRS, PITS, & SCRATCHES

TOLERANCES
FRACTIONAL DIM. ± 1/64
2 PLACE DECIMAL ± .010
3 PLACE DECIMAL ± .005
ANGULAR DIM. ± 1/2°

DWG NO. 092-2307