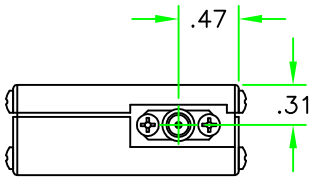

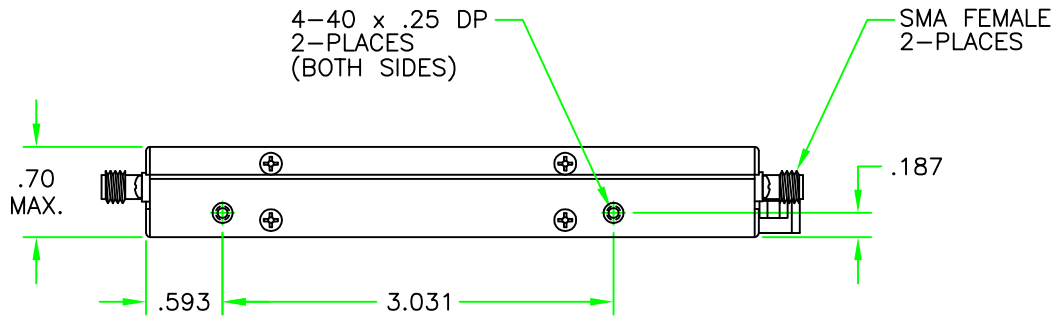

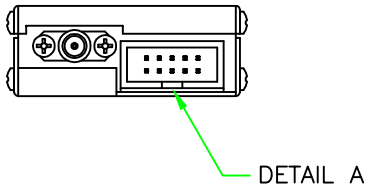

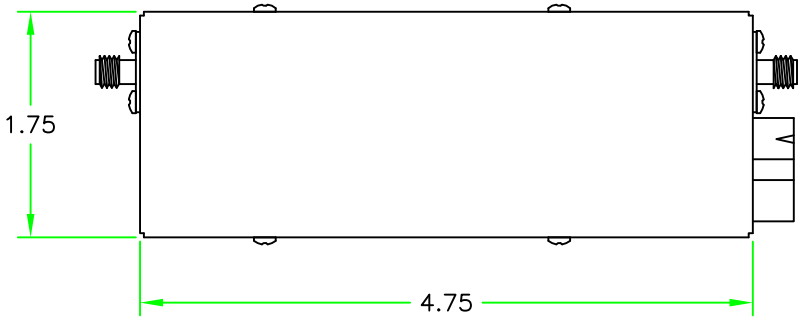

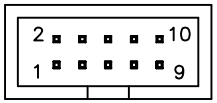

DETAIL A
T&B #609–1057

PIN	FUNCTION
1	1 dB TTL CONT.
2	2 dB TTL CONT.
3	4 dB TTL CONT.
4	8 dB TTL CONT.
5	16 dB TTL CONT.
6	32 dB TTL CONT.
7	64 dB TTL CONT.
8	–5 Vdc
9	+5 Vdc
10	GROUND

JFW INDUSTRIES, INC.
INDIANAPOLIS, IN

REV	ECN	DATE	BY

DRAWN BY: T. ZEISS
DATE: 5–2–08
APP'D BY:
SCALE: FULL
MATERIAL: BRASS
FINISH: NICKEL
DESCRIPTION: 50P–XXXX: PROG. ATTEN.

PROPRIETARY INFORMATION
ALL SURFACES ARE TO BE FREE OF BURRS, PITS, & SCRATCHES
TOLERANCES
FRACTIONAL DIM. ± 1/64
2 PLACE DECIMAL ±.010
3 PLACE DECIMAL ±.005
ANGULAR DIM. ± 1/2°
DWG NO. 092–5410–02