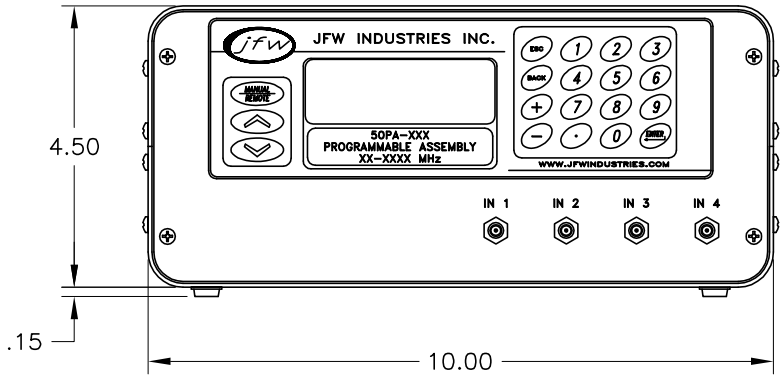

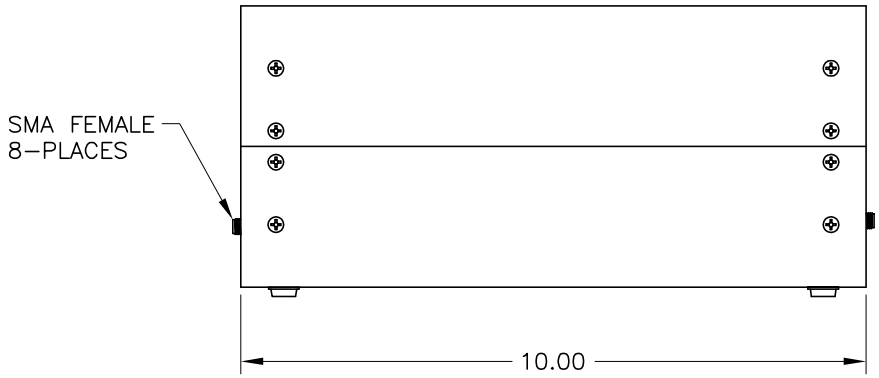

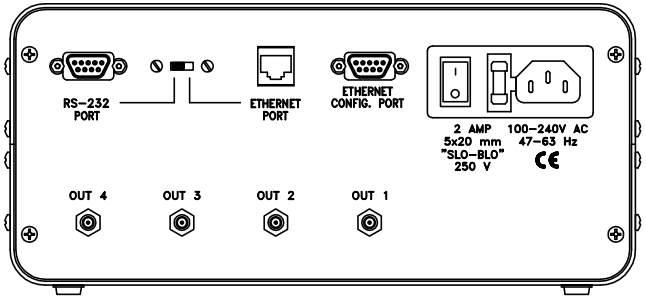

REAR VIEW

REV	ECN	DATE	BY	APPR
–	ISSUED	11-10-08	BZ	TEZ

JFW INDUSTRIES, INC.

www.jfwindustries.com PH: 317-887-1340

MATERIAL	ALUMINUM ALLOY	PROPRIETARY INFORMATION
FINISH	CASE: BLACK PAINT / FRONT & REAR: GRAY PAINT	ALL SURFACES ARE TO BE FREE OF BURRS, PITS, & SCRATCHES
MODEL	50PA-XXX — SCALE 1/2	TOLERANCES .XX±.010 .XXX±.005 XX°±.5°
DESCRIPTION	PROGRAMMABLE ATTENUATOR	DWG # 092-5987