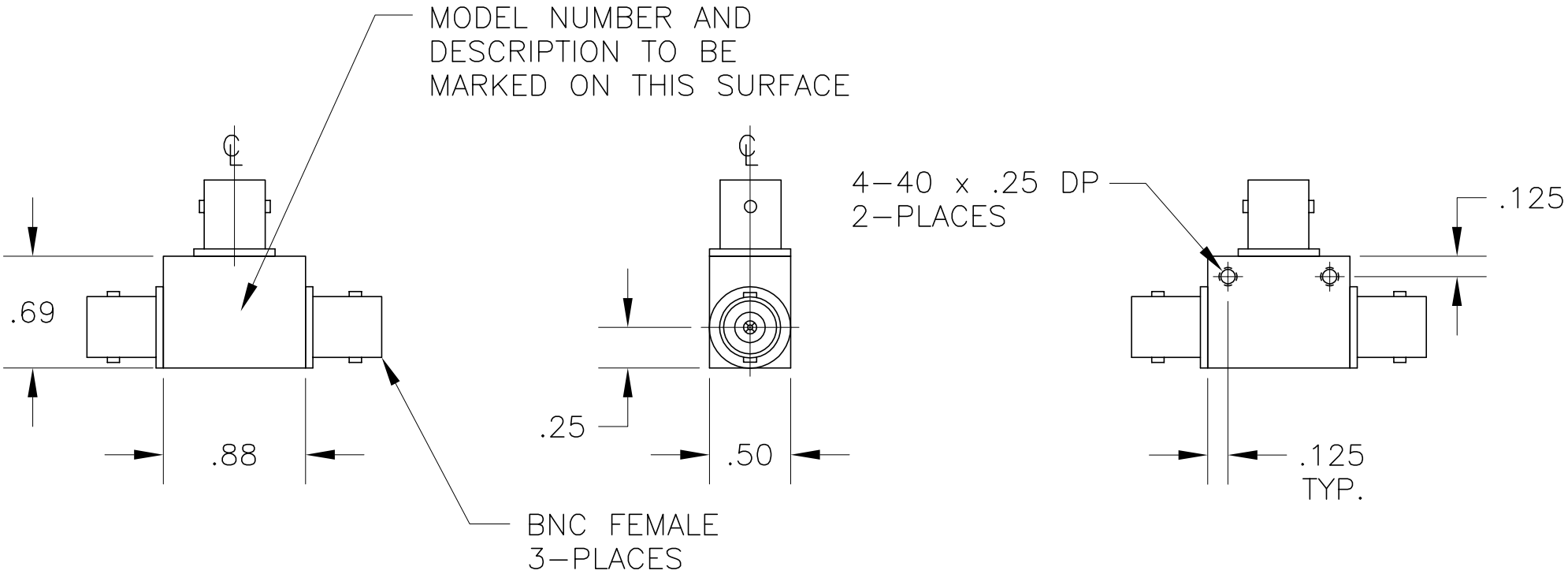

JFW INDUSTRIES, INC.
INDIANAPOLIS, IN

REV	ECN	DATE	BY
A	7296	11-18-02	BZ
B	12635	4-20-06	ETW

DRAWN BY	B. ZEIHEN	DATE	11-18-02
APP'D BY		SCALE	FULL
MATERIAL	ALUMINUM ALLOY		
FINISH	CHEMFILM TCP		
DESCRIPTION	BIAS T 50BT-XXX POWER DIVIDER 50PD & 75PD		

PROPRIETARY INFORMATION

ALL SURFACES ARE TO BE FREE OF BURRS, PITS, & SCRATCHES

TOLERANCES

FRACTIONAL DIM. ± 1/64

2 PLACE DECIMAL ± .010

3 PLACE DECIMAL ± .005

ANGULAR DIM. ± 1/2°

DWG NO. 092-181