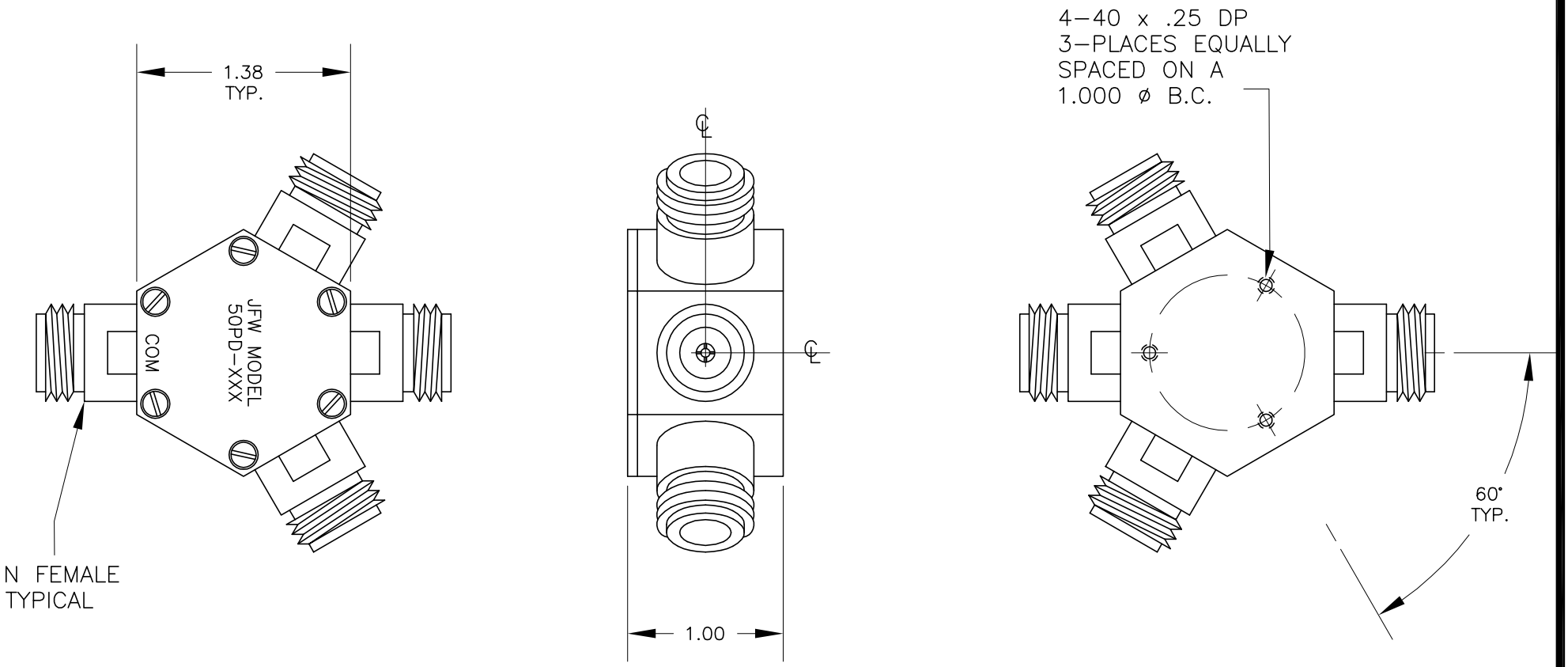


| REV | ECN | DATE | BY | APPR |
|---|---|---|---|---|
| – | ISSUED | 07-15-10 | JZ | TRS |

**JFW INDUSTRIES, INC.**

www.jfwindustries.com PH: 317-887-1340

| | | |
|---|---|---|
| MATERIAL | ALUMINUM ALLOY | PROPRIETARY INFORMATION |
| FINISH | CHEMFILM TCP | ALL SURFACES ARE TO BE FREE OF BURRS, PITS, & SCRATCHES |
| MODEL | 50PD-XXX | SCALE FULL |
| | | TOLERANCES .XX±.010 .XXX±.005 XX°±.5° |
| DESCRIPTION | 3 WAY RESISTIVE POWER DIVIDER | DWG # 092-2328-03 |