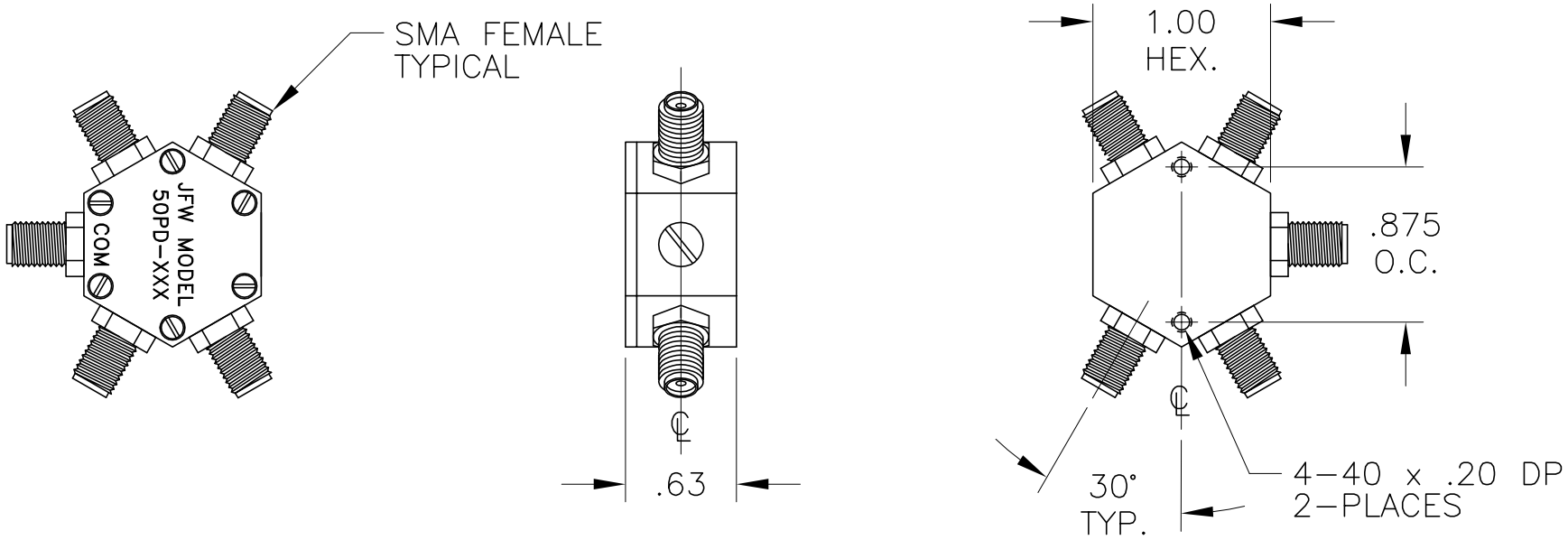

REV	ECN	DATE	BY	APPR
–	ISSUED	07-15-10	JZ	TRS

JFW INDUSTRIES, INC.

www.jfwindustries.com PH: 317-887-1340

MATERIAL	ALUMINUM ALLOY	PROPRIETARY INFORMATION
FINISH	CHEMFILM TCP	ALL SURFACES ARE TO BE FREE OF BURRS, PITS, & SCRATCHES
MODEL	50PD-XXX SMA — SCALE FULL	TOLERANCES .XX±.010 .XXX±.005 XX°±.5°
DESCRIPTION	4 WAY RESISTIVE POWER DIVIDER	DWG # 092-925-04