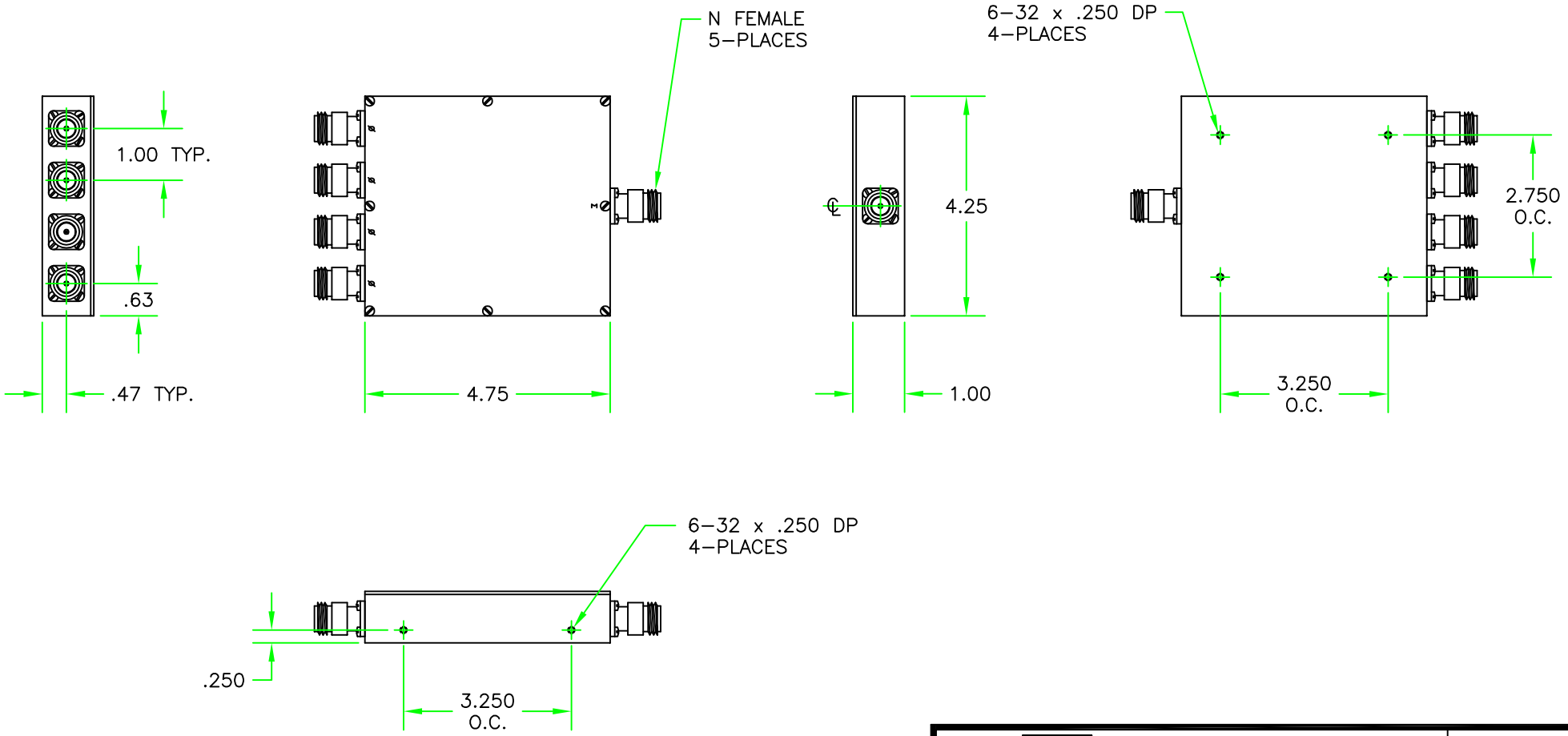

JFW INDUSTRIES, INC.
INDIANAPOLIS, IN

REV	ECN	DATE	BY
A	4936	3-28-96	CDJ
B	5317	7-1-97	TEZ
C	5495	12-4-97	TEZ
D	12635	4-20-06	ETW

DRAWN BY: T. ZEISS
DATE: 12-4-97
APP'D BY:
SCALE: 1/2
MATERIAL: ALUMINUM ALLOY
FINISH: CHEMFILM TCP
DESCRIPTION: 50PD-XXX: 4 WAY POWER DIVIDER

PROPRIETARY INFORMATION
ALL SURFACES ARE TO BE FREE OF BURRS, PITS, & SCRATCHES
TOLERANCES
FRACTIONAL DIM. ± 1/64
2 PLACE DECIMAL ±.010
3 PLACE DECIMAL ±.005
ANGULAR DIM. ± 1/2°
DWG NO. 092-2374