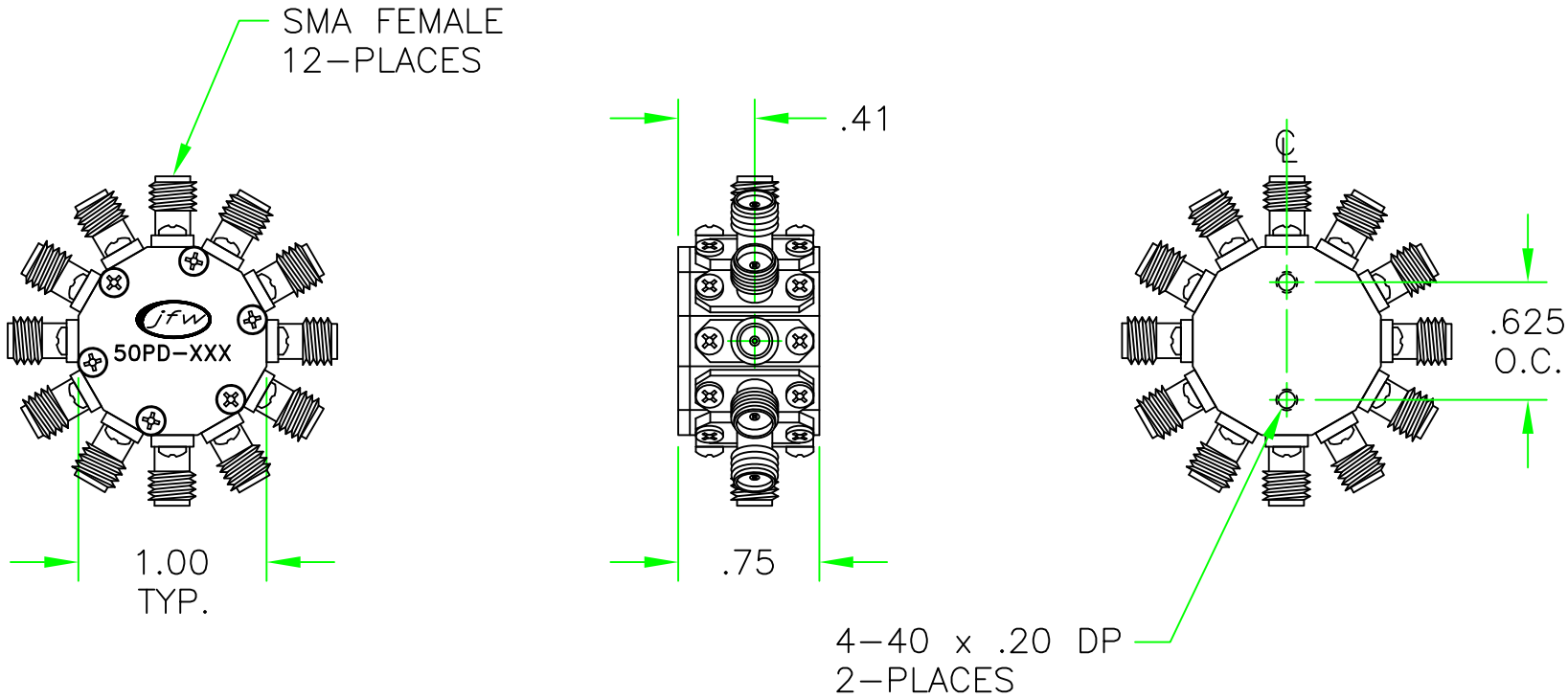

REV	ECN	DATE	BY	APPR
–	ISSUED	7–12–10	BZ	TEZ
A	19041	8–23–10	TEZ	TEZ

JFW INDUSTRIES, INC.

www.jfwindustries.com PH: 317–887–1340

MATERIAL	ALUMINUM ALLOY		PROPRIETARY INFORMATION
FINISH	ELECTROLESS NICKEL		ALL SURFACES ARE TO BE FREE OF BURRS, PITS, & SCRATCHES
MODEL	50PD–XXX	SCALE FULL	TOLERANCES .XX±.010 .XXX±.005 XX°±.5°
DESCRIPTION	12 PORT POWER DIVIDER		DWG # 092–6631