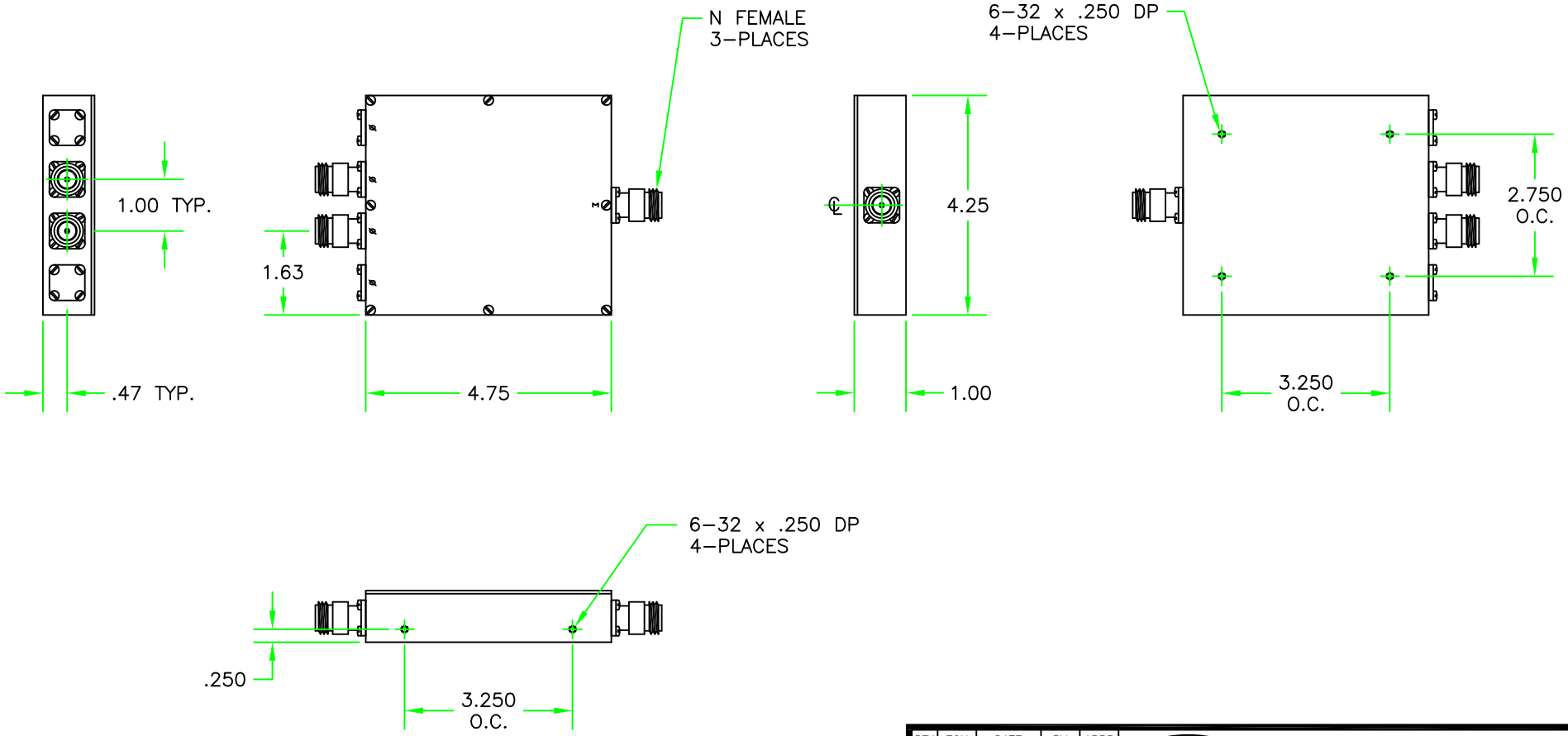

REV	ECN	DATE	BY	APPR
–	ISSUED	10-7-10	DTS	TRS

JFW INDUSTRIES, INC.
www.jfwindustries.com PH: 317-887-1340

MATERIAL	ALUMINUM ALLOY	PROPRIETARY INFORMATION
FINISH	CHEMFILM TCP	ALL SURFACES ARE TO BE FREE OF BURRS, PITS, & SCRATCHES
MODEL	50PD-XXX — SCALE 1/2	TOLERANCES .XX±.010 .XXX±.005 XX°±.5°
DESCRIPTION	2WAY POWER DIVIDER/COMBINER	DWG # 092-6742