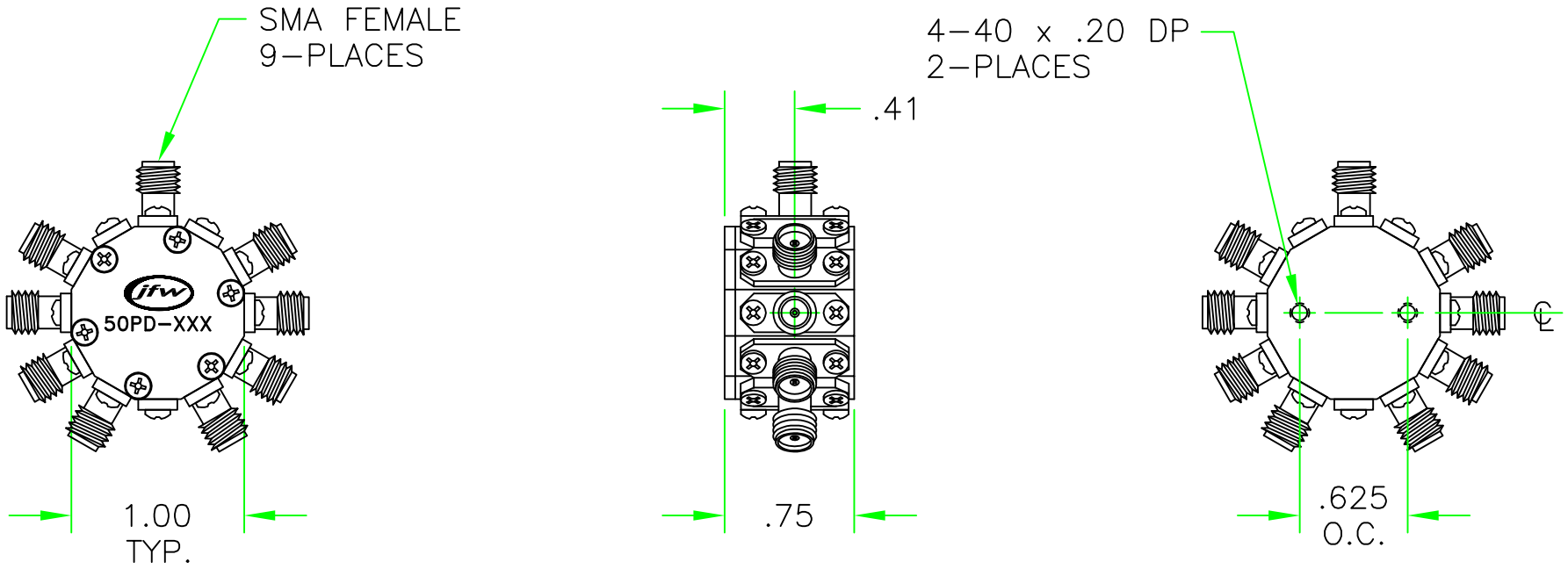

REV	ECN	DATE	BY	APPR
–	ISSUED	10-20-10	DTS	TRS
A	19574	1-4-11	TEZ	TEZ

JFW INDUSTRIES, INC.

www.jfwindustries.com PH: 317-887-1340

MATERIAL: ALUMINUM ALLOY		PROPRIETARY INFORMATION
FINISH: ELECTROLESS NICKEL		ALL SURFACES ARE TO BE FREE OF BURRS, PITS, & SCRATCHES
MODEL: 50PD-XXX	SCALE: FULL	TOLERANCES .XX±.010 .XXX±.005 XX°±.5°
DESCRIPTION: 8WAY POWER DIVIDER/COMBINER		DWG #: 092-6756