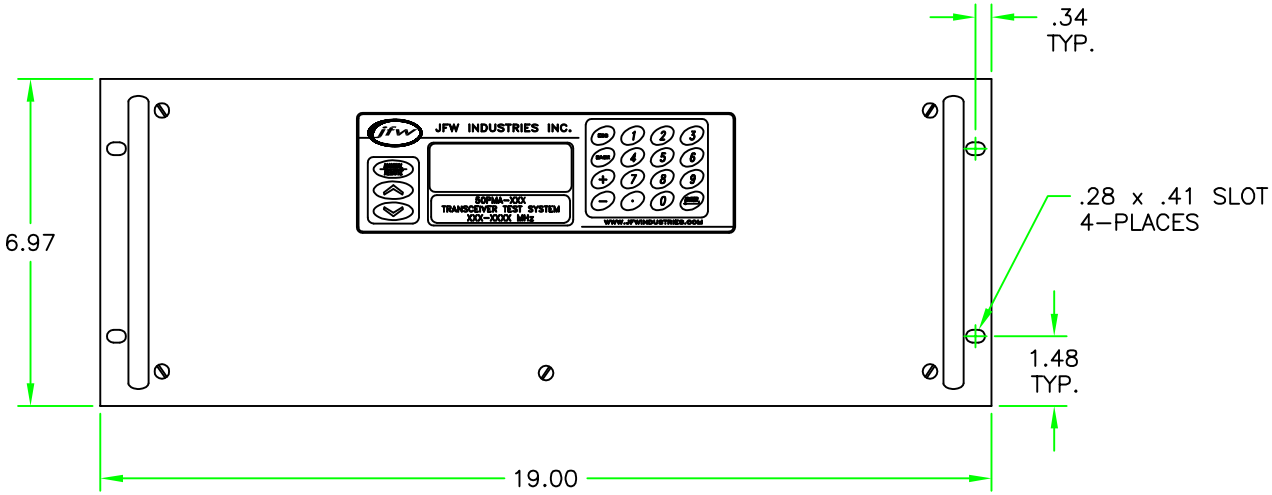

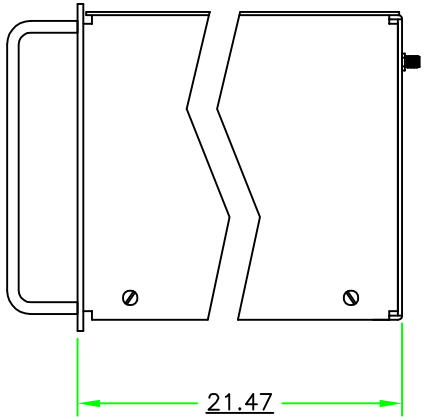

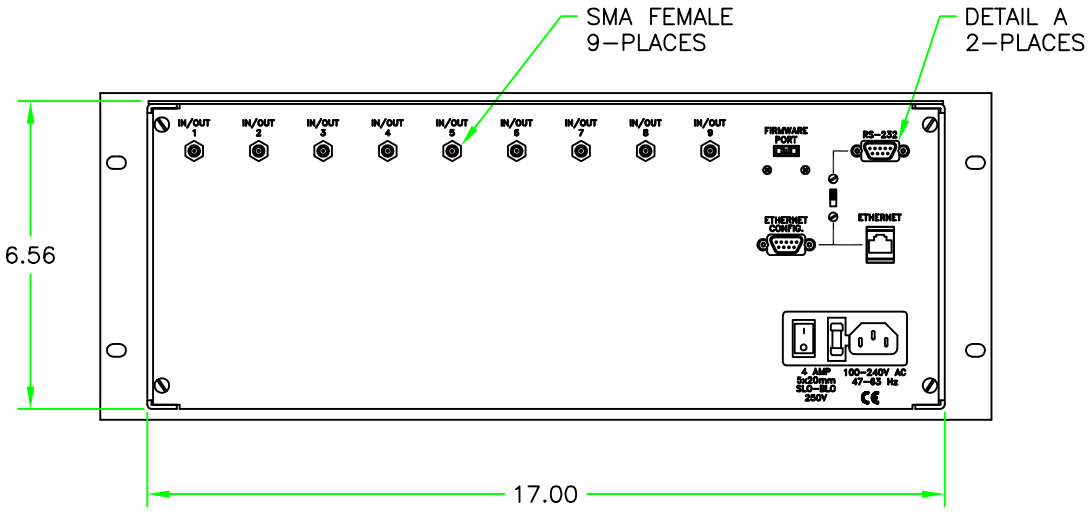

REAR VIEW

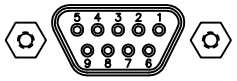

DETAIL A
DE-9S

PIN	FUNCTION
1	CHASSIS GROUND
2	RECEIVED DATA
3	TRANSMITTED DATA
4	NO CONNECTION
5	SIGNAL GROUND
6	NO CONNECTION
7	NO CONNECTION
8	NO CONNECTION
9	NO CONNECTION

REV	ECN	DATE	BY	APPR
–	ISSUED	3-5-09	BZ	TEZ

JFW INDUSTRIES, INC.
www.jfwindustries.com PH: 317-887-1340

MATERIAL	ALUMINUM ALLOY	PROPRIETARY INFORMATION
FINISH	CHEMFILM TCP / FRONT: BLACK	ALL SURFACES ARE TO BE FREE OF BURRS, PITS, & SCRATCHES
MODEL	50PMA-XXX — SCALE 3/8	TOLERANCES .XX±.010 .XXX±.005 XX°±.5°
DESCRIPTION	TRANCEIVER TEST SYSTEM	DWG # 092-6110