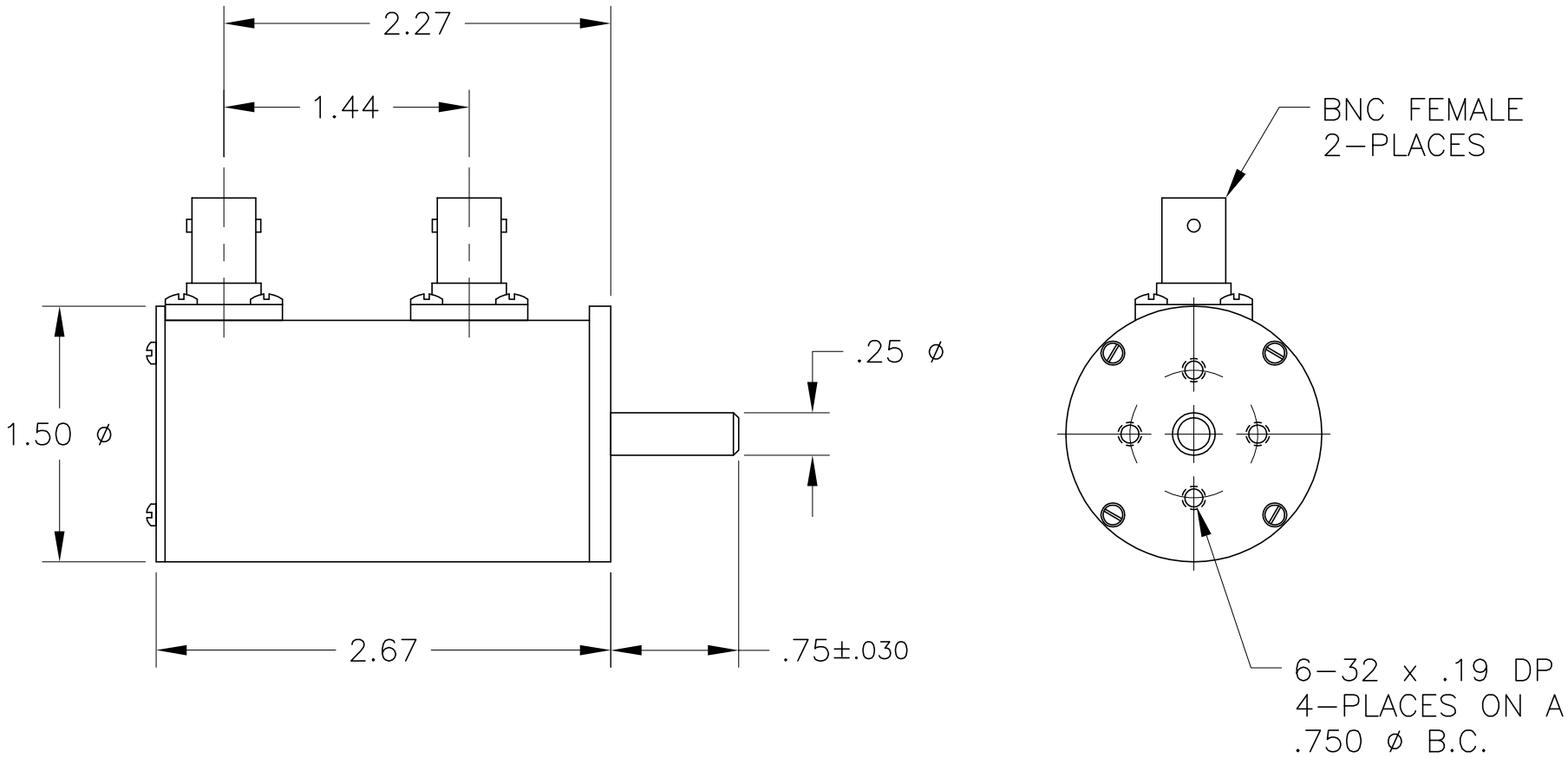


| REV | ECN | DATE | BY | APPR |
|---|---|---|---|---|
| – | ISSUED | 6-10-09 | BZ | TRS |

**JFW INDUSTRIES, INC.**

www.jfwindustries.com PH: 317-887-1340

| | | | |
|---|---|---|---|
| MATERIAL | ALUMINUM ALLOY | | PROPRIETARY INFORMATION |
| FINISH | CHEMFILM TCP | | ALL SURFACES ARE TO BE FREE OF BURRS, PITS, & SCRATCHES |
| MODEL | XXR-XXX | SCALE FULL | TOLERANCES .XX±.010 .XXX±.005 XX°±.5° |
| DESCRIPTION | ROTARY ATTENUATOR | | DWG # 092-428-01 |