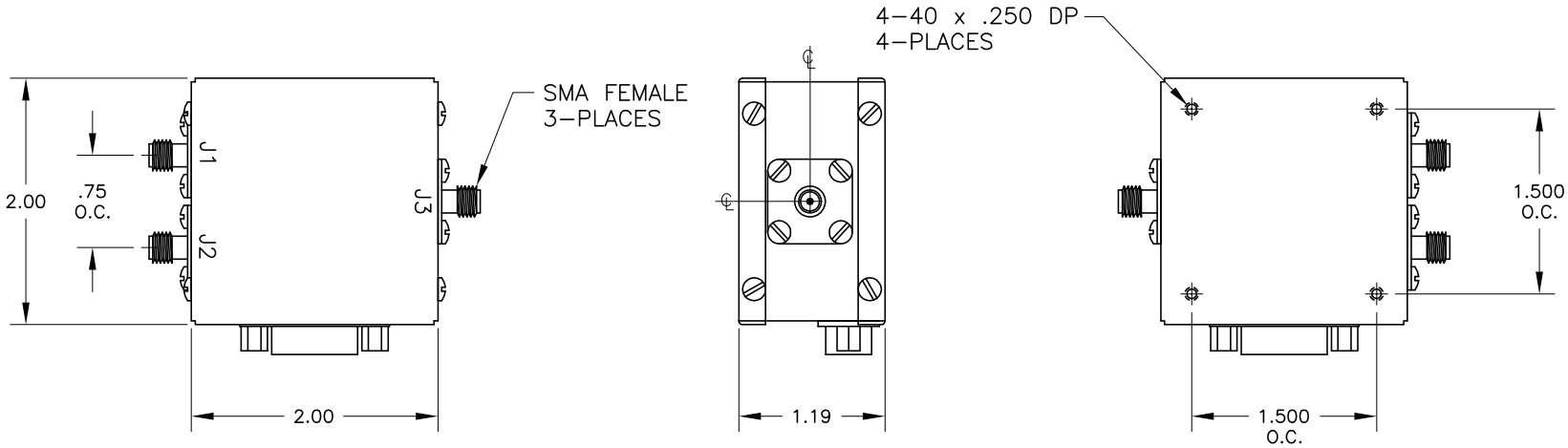

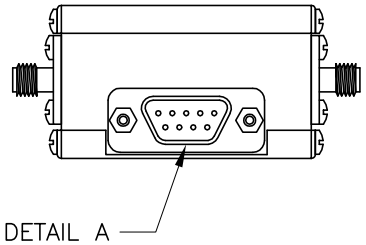

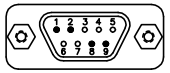

DETAIL A
DE-9P

PIN	FUNCTION
1	TTL CONT. 1
2	TTL CONT. 2
3	NO CONNECTION
4	NO CONNECTION
5	NO CONNECTION
6	NO CONNECTION
7	NO CONNECTION
8	+24Vdc
9	GND

J3 TO	C1	C2
J1	1	0
J2	0	1
OFF	0	0

JFW INDUSTRIES, INC.
INDIANAPOLIS, IN

REV	ECN	DATE	BY
A	6816	9-7-01	CMB
B	7060	4-4-02	CMB
C	7708	1-12-04	TEZ

DRAWN BY: C. BRYANT
DATE: 11-2-00
APP'D BY:
SCALE: FULL
MATERIAL: BRASS
FINISH: NICKEL
DESCRIPTION: 50S-XXXX: 1P2T SWITCH

PROPRIETARY INFORMATION
ALL SURFACES ARE TO BE FREE OF BURRS, PITS, & SCRATCHES
TOLERANCES
FRACTIONAL DIM. ± 1/64
2 PLACE DECIMAL ±.010
3 PLACE DECIMAL ±.005
ANGULAR DIM. ± 1/2°
DWG NO. 092-3506