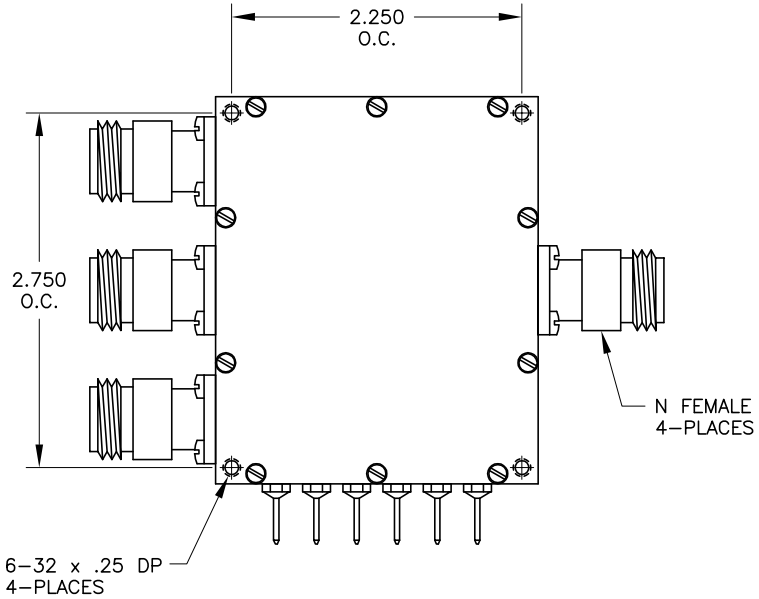

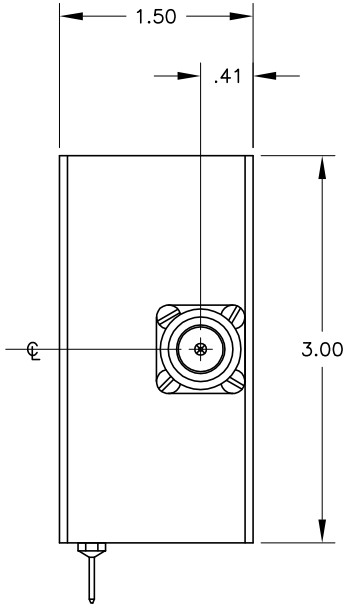

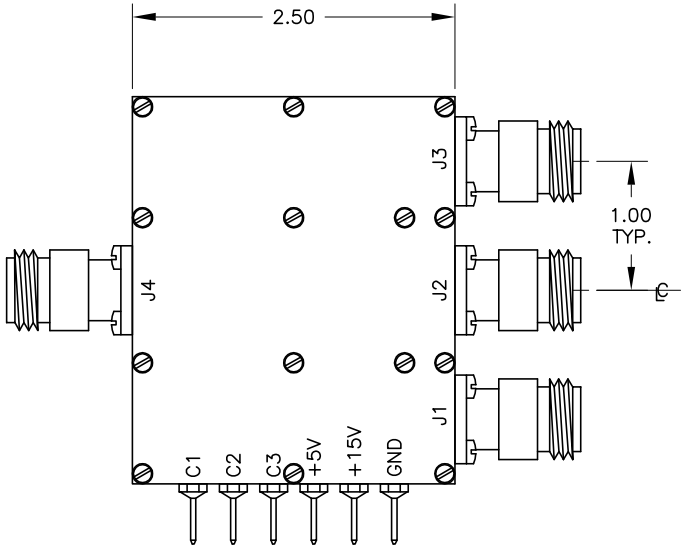

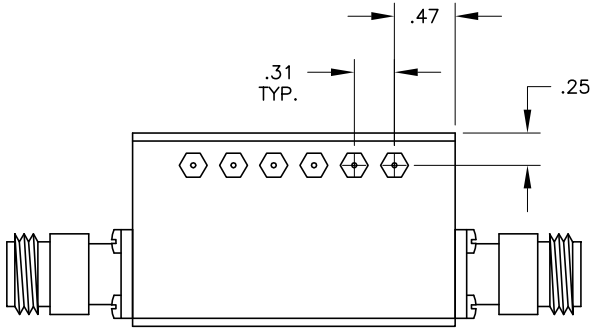

JFW INDUSTRIES, INC.
INDIANAPOLIS, IN

REV	ECN	DATE	BY

DRAWN BY	B. ZEIHEN	DATE	1–18–05
APP'D BY		SCALE	FULL
MATERIAL	ALUMINUM ALLOY		
FINISH	ELECTROLESS NICKEL		
DESCRIPTION	50S–XXX: 1P3T SWITCH		

PROPRIETARY INFORMATION

ALL SURFACES ARE TO BE FREE OF BURRS, PITS, & SCRATCHES

TOLERANCES
FRACTIONAL DIM. ± 1/64
2 PLACE DECIMAL ±.010
3 PLACE DECIMAL ±.005
ANGULAR DIM. ± 1/2°

DWG NO. 092–4704