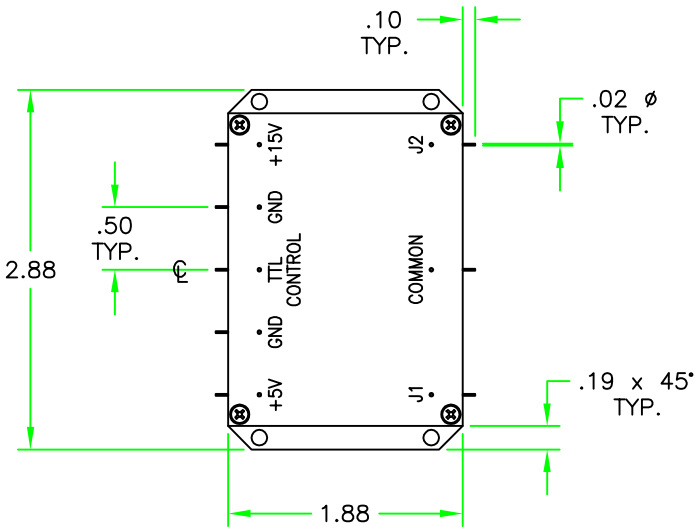

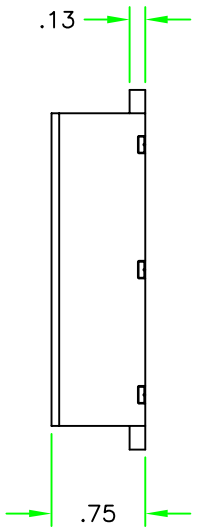

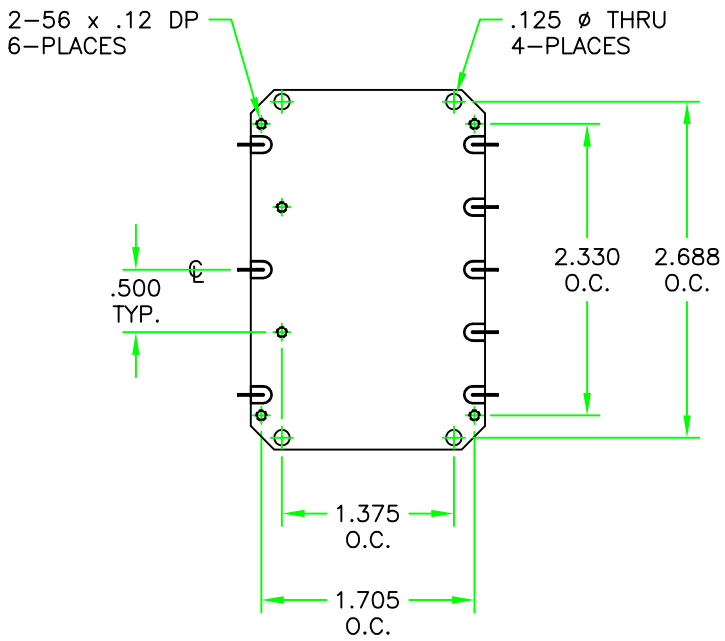

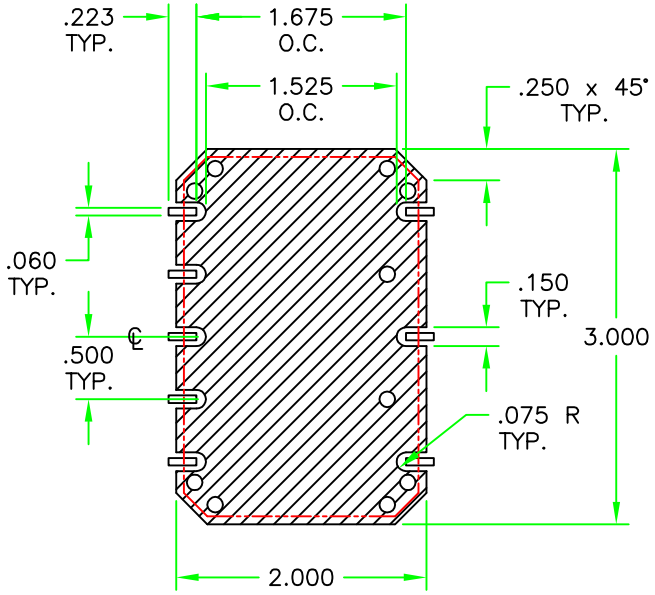

RECOMMENDED MOUNTING

REV	ECN	DATE	BY	APPR
–	ISSUED	8-9-10	BZ	TEZ
A	19120	9-15-10	BZ	TEZ

JFW INDUSTRIES, INC.
www.jfwindustries.com PH: 317-887-1340

MATERIAL	ALUMINUM ALLOY		PROPRIETARY INFORMATION
FINISH	ELECTROLESS NICKEL		ALL SURFACES ARE TO BE FREE OF BURRS, PITS, & SCRATCHES
MODEL	50S-XXXX	SCALE FULL	TOLERANCES .XX±.010 .XXX±.005 XX°±.5°
DESCRIPTION	1P2T SWITCH		DWG # 092-6682