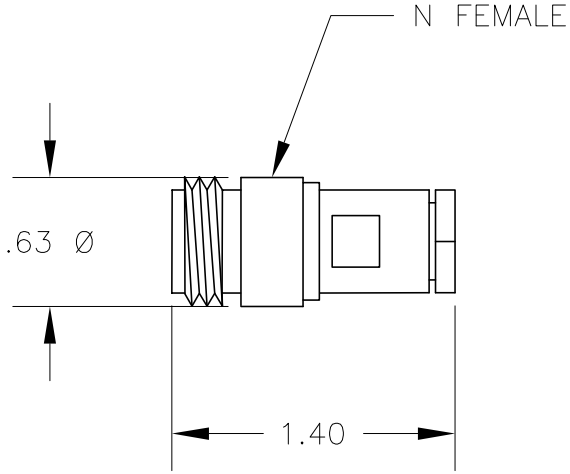

JFW INDUSTRIES, INC.
INDIANAPOLIS, IN

REV	ECN	DATE	BY
A	7003	2-4-02	MAH
B	10111	11-3-04	BZ

DRAWN BY: M. HUFF
DATE: 2-4-02
APP'D BY:
SCALE: FULL
MATERIAL:
FINISH:
DESCRIPTION: N FEMALE TERMINATION

PROPRIETARY INFORMATION

ALL SURFACES ARE TO BE FREE OF BURRS, PITS, & SCRATCHES

TOLERANCES
FRACTIONAL DIM. ± 1/64
2 PLACE DECIMAL ± .010
3 PLACE DECIMAL ± .005
ANGULAR DIM. ± 1/2°

DWG NO. 092-1976