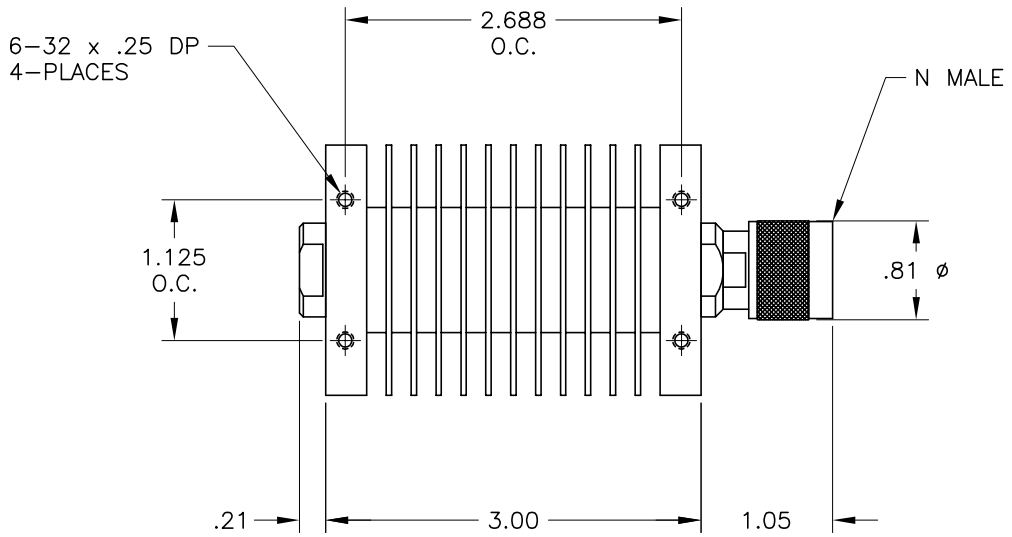

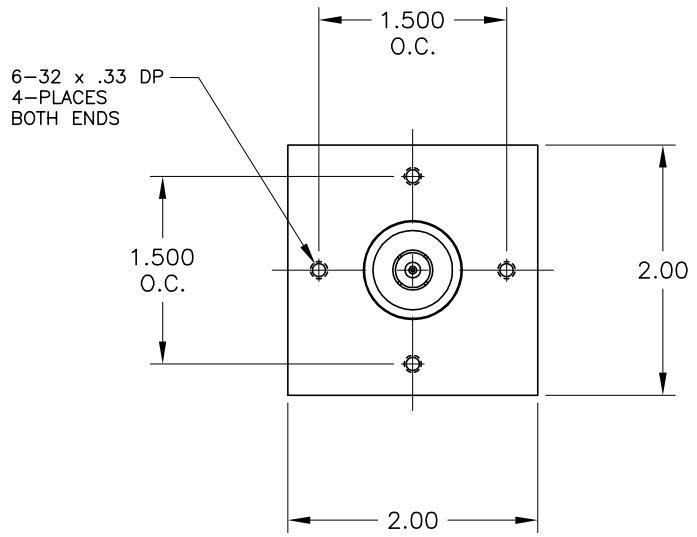

REV	ECN	DATE	BY	APPR
–	ISSUED	3-26-10	TEZ	SMR

JFW INDUSTRIES, INC.

www.jfwindustries.com PH: 317-887-1340

MATERIAL	ALUMINUM ALLOY	PROPRIETARY INFORMATION
FINISH	BLACK ANODIZE	ALL SURFACES ARE TO BE FREE OF BURRS, PITS, & SCRATCHES
MODEL / SCALE	FULL	TOLERANCES .XX±.010 .XXX±.005 XX°±.5°
DESCRIPTION	TERMINATION	DWG # 092-303-03