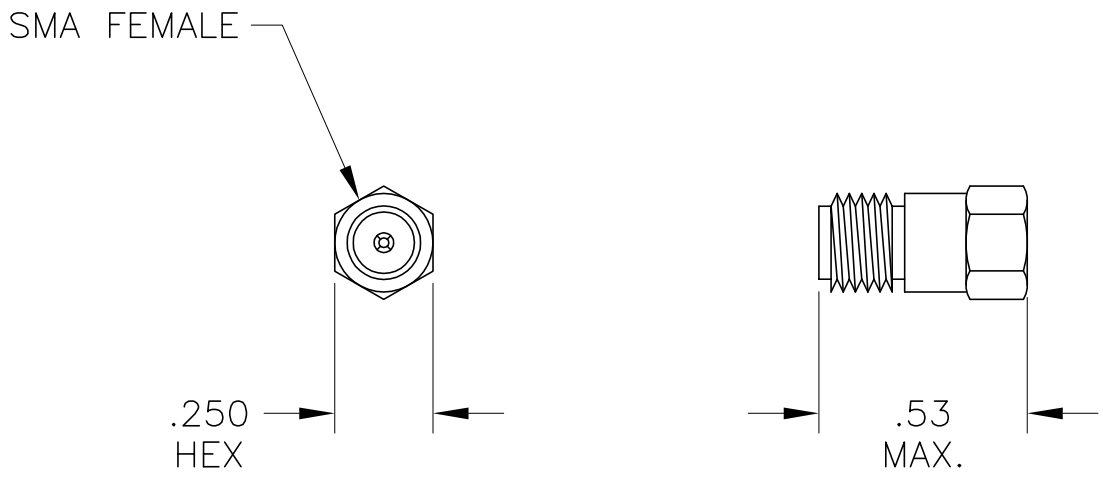

REV	ECN	DATE	BY	APPR
–	ISSUED	8–4–06	BZ	TEZ
A	18922	7–28–10	TEZ	TRS

JFW INDUSTRIES, INC.

www.jfwindustries.com PH: 317–887–1340

MATERIAL: STAINLESS STEEL		PROPRIETARY INFORMATION
FINISH: GOLD		ALL SURFACES ARE TO BE FREE OF BURRS, PITS, & SCRATCHES
MODEL: 50T–XXX	SCALE: 2X	TOLERANCES .XX±.010 .XXX±.005 XX°±.5°
DESCRIPTION: TERMINATION		DWG #: 092–5172