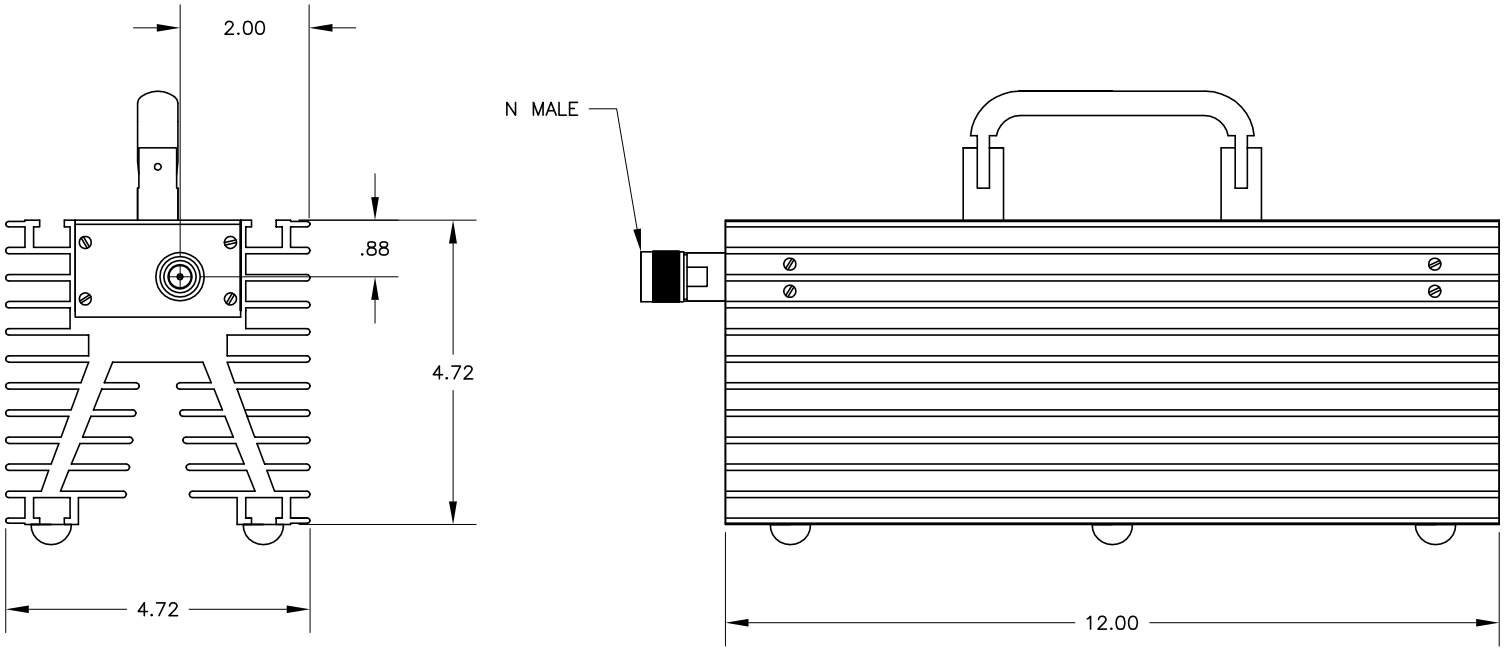

JFW INDUSTRIES, INC.
INDIANAPOLIS, IN

REV	ECN	DATE	BY
A	3603	14 APR 92	P.T.
B	3826	14 DEC 92	TEZ
C	6989	24 JAN 02	CMB

DRAWN BY C. BRYANT
DATE 14 DEC 92
APP'D BY
SCALE 1/2
MATERIAL ALUMINUM ALLOY
FINISH BLACK ANODIZE
DESCRIPTION 50T–XXX 200 WATT TERMINATION

PROPRIETARY INFORMATION
ALL SURFACES ARE TO BE FREE OF BURRS, PITS, & SCRATCHES
TOLERANCES
FRACTIONAL DIM. ± 1/64
2 PLACE DECIMAL ±.010
3 PLACE DECIMAL ±.005
ANGULAR DIM. ± 1/2°
DWG NO. 092–1585