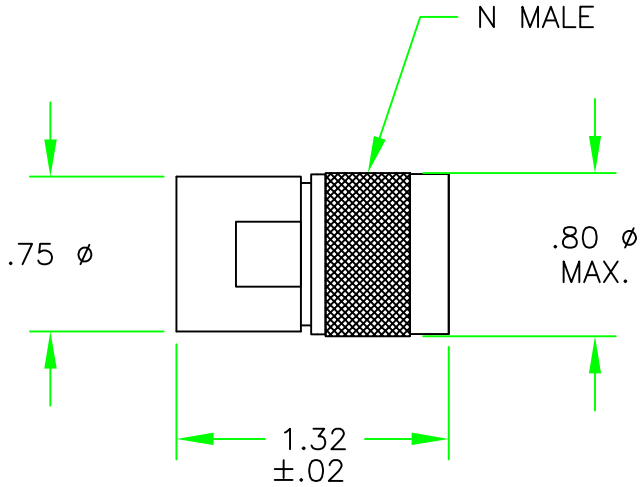

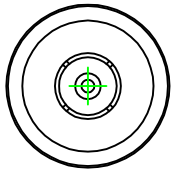

JFW INDUSTRIES, INC.
INDIANAPOLIS, IN

REV	ECN	DATE	BY
A	7215	8-19-02	TEZ

DRAWN BY	T. ZEISS	DATE	1-9-95
APP'D BY		SCALE	FULL
MATERIAL	CONN: BRASS/CONDUCTOR: BERYLLIUM COPPER		
FINISH	CONN: NICKEL/CONDUCTOR: SILVER		
DESCRIPTION	50T-199 2 WATT TERMINATION		

PROPRIETARY INFORMATION

ALL SURFACES ARE TO BE FREE OF BURRS, PITS, & SCRATCHES

TOLERANCES

FRACTIONAL DIM. ± 1/64

2 PLACE DECIMAL ± .010

3 PLACE DECIMAL ± .005

ANGULAR DIM. ± 1/2°

DWG NO.
092-2268