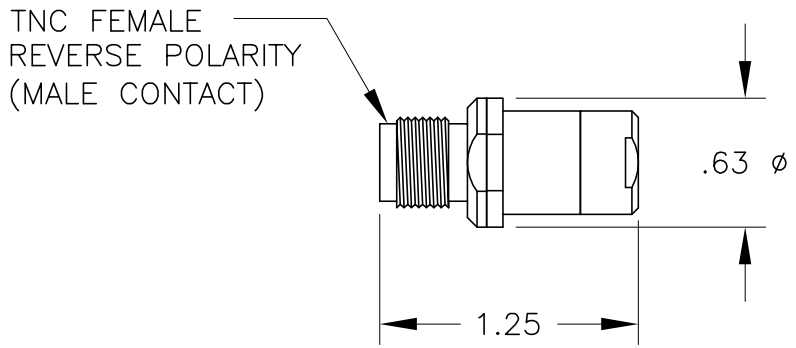

JFW INDUSTRIES, INC.
INDIANAPOLIS, IN

REV	ECN	DATE	BY
A	11514	7-20-05	LT

DRAWN BY: PAUL TACKETT
DATE: 9-3-99
APP'D BY:
SCALE: FULL
MATERIAL:
FINISH:
DESCRIPTION:
50T-XXX RPT F
REVERSE POLARITY TERMINATION

PROPRIETARY INFORMATION

ALL SURFACES ARE TO BE FREE OF BURRS, PITS, & SCRATCHES

TOLERANCES
FRACTIONAL DIM. ± 1/64
2 PLACE DECIMAL ± .010
3 PLACE DECIMAL ± .005
ANGULAR DIM. ± 1/2°

DWG NO.
092-3145