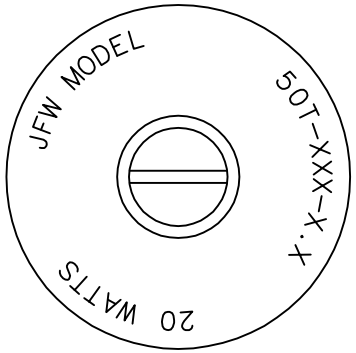

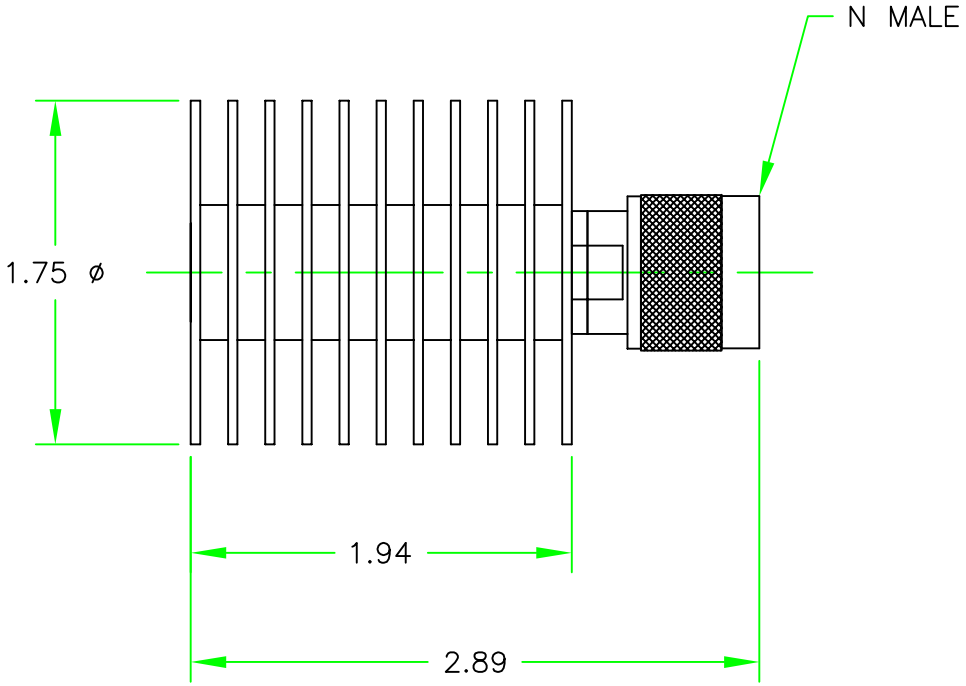

REV	ECN	DATE	BY	APPR
–	ISSUED	6–29–11	JZ	TEZ

JFW INDUSTRIES, INC.

www.jfwindustries.com PH: 317–887–1340

MATERIAL	HEATSINK: ALUMINUM ALLOY CONNECTOR: BRASS	PROPRIETARY INFORMATION
FINISH	HEATSINK: BLACK ANODIZED CONNECTOR: NICKEL	ALL SURFACES ARE TO BE FREE OF BURRS, PITS, & SCRATCHES
MODEL 50T–358–XX	SCALE FULL	TOLERANCES .XX±.010 .XXX±.005 XX°±.5°
DESCRIPTION 20 WATT TERMINATION		DWG # 092–3929–01