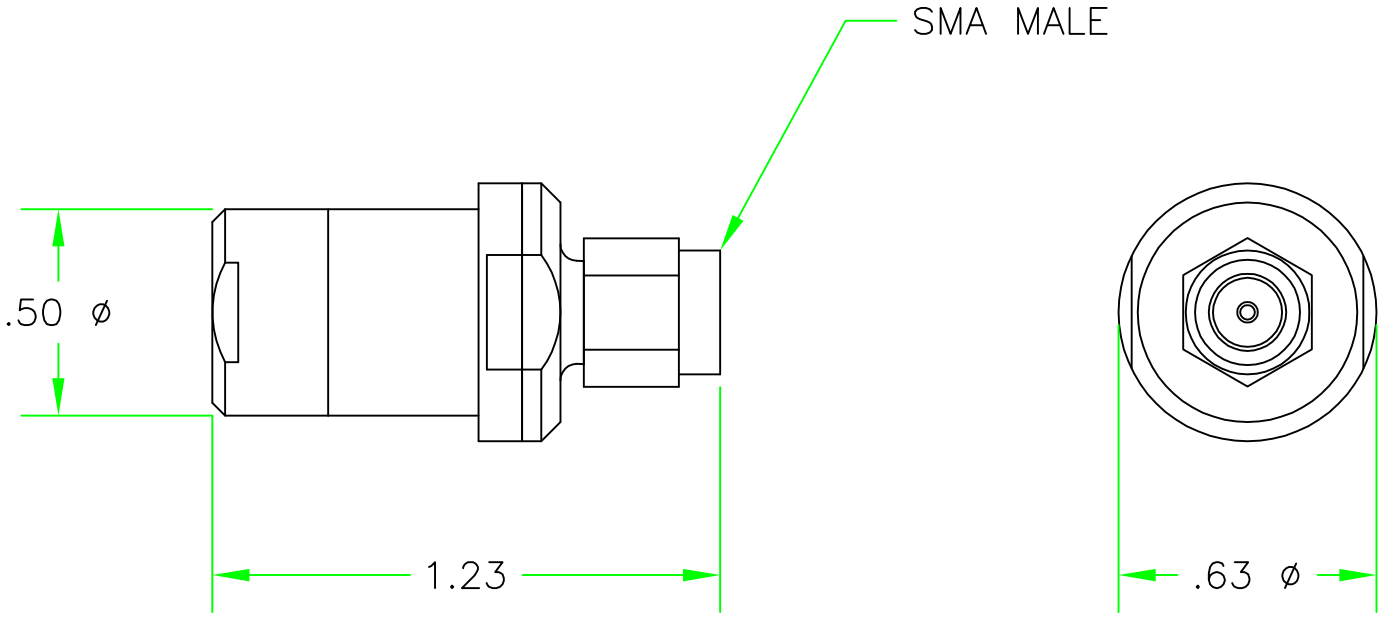

JFW INDUSTRIES, INC.
INDIANAPOLIS, IN

REV	ECN	DATE	BY

DRAWN BY	B. ZEIHEN	DATE	8–4–03
APP'D BY		SCALE	2X
MATERIAL			
FINISH			
DESCRIPTION	50T–XXX: TERMINATION		

PROPRIETARY INFORMATION

ALL SURFACES ARE TO BE FREE OF BURRS, PITS, & SCRATCHES

TOLERANCES

FRACTIONAL DIM. ± 1/64

2 PLACE DECIMAL ± .010

3 PLACE DECIMAL ± .005

ANGULAR DIM. ± 1/2°

DWG NO. 092–4269