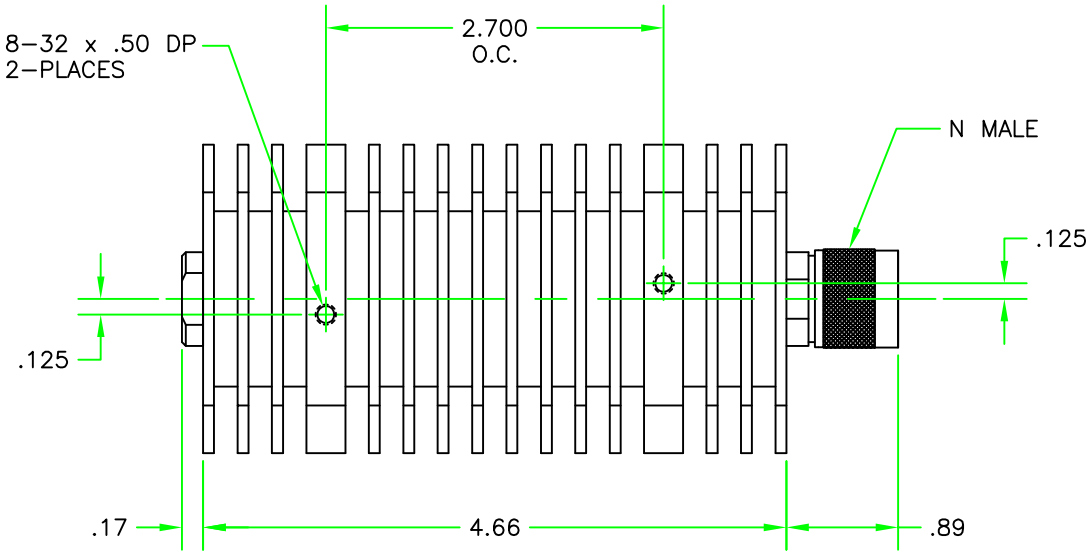

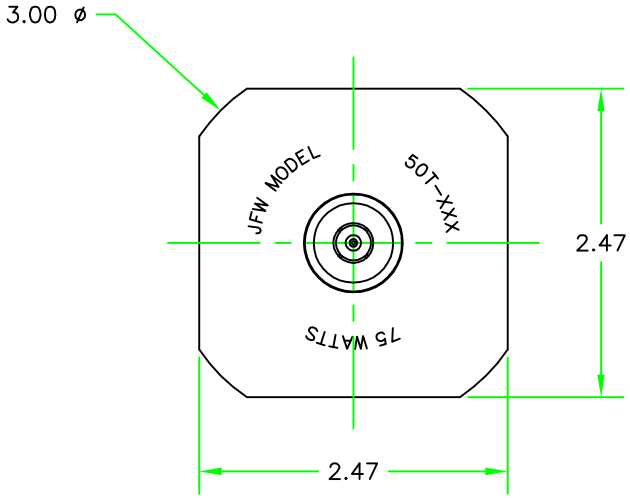

REV	ECN	DATE	BY	APPR
–	ISSUED	8–8–11	JZ	TEZ

JFW INDUSTRIES, INC.
www.jfwindustries.com PH: 317–887–1340

MATERIAL	ALUMINUM ALLOY	PROPRIETARY INFORMATION
FINISH	BLACK ANODIZE	ALL SURFACES ARE TO BE FREE OF BURRS, PITS, & SCRATCHES
MODEL 50T–XXX	SCALE FULL	TOLERANCES .XX±.010 .XXX±.005 XX°±.5°
DESCRIPTION 75 WATT TERMINATION		DWG # 092–7055