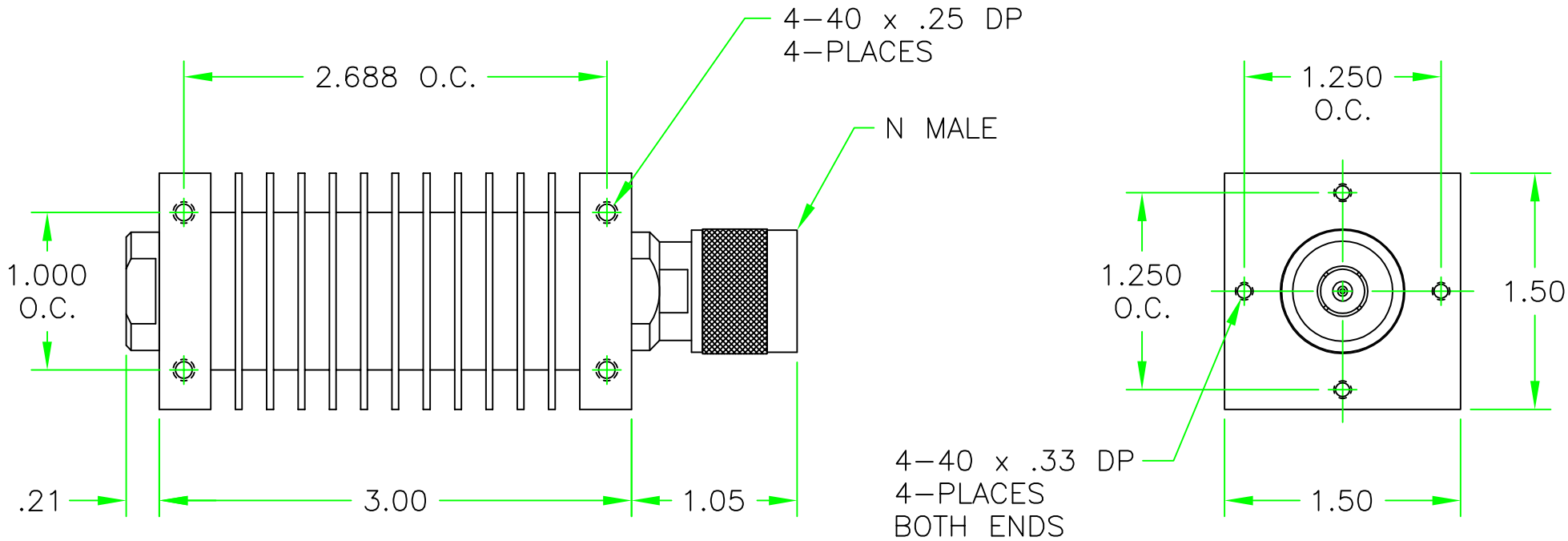

REV	ECN	DATE	BY	APPR
–	ISSUED	3–9–06	TEZ	TEZ
A	20425	8–8–11	JZ	TEZ

JFW INDUSTRIES, INC.

www.jfwindustries.com PH: 317–887–1340

MATERIAL	ALUMINUM ALLOY		PROPRIETARY INFORMATION
FINISH	BLACK ANODIZE		ALL SURFACES ARE TO BE FREE OF BURRS, PITS, & SCRATCHES
MODEL	50T–XXX	SCALE FULL	TOLERANCES .XX±.010 .XXX±.005 XX°±.5°
DESCRIPTION	TERMINATION		DWG # 092–5062