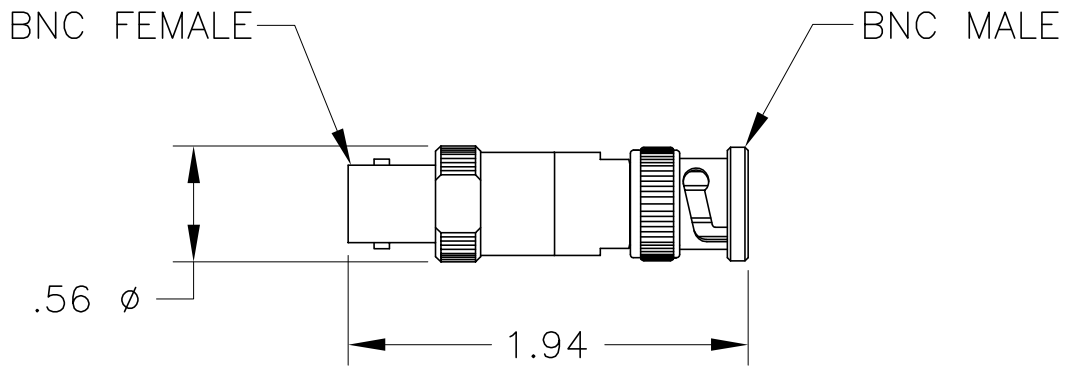

JFW INDUSTRIES, INC.
INDIANAPOLIS, IN

REV	ECN	DATE	BY
A	3047	9-26-90	TEZ
B	3580	3-24-92	TEZ
C	4015	8-05-93	PT
D	5183	1-23-97	CDJ
E	5769	8-17-98	CDJ
F	15599	3-24-08	TEZ

DRAWN BY: CDJ
DATE: 1-22-97
APP'D BY:
SCALE: FULL
MATERIAL: BRASS
FINISH: NICKEL
DESCRIPTION: BNC FEMALE/BNC MALE

PROPRIETARY INFORMATION

ALL SURFACES ARE TO BE FREE OF BURRS, PITS, & SCRATCHES

TOLERANCES
FRACTIONAL DIM. ± 1/64
2 PLACE DECIMAL ± .010
3 PLACE DECIMAL ± .005
ANGULAR DIM. ± 1/2°

DWG NO. 092-1069