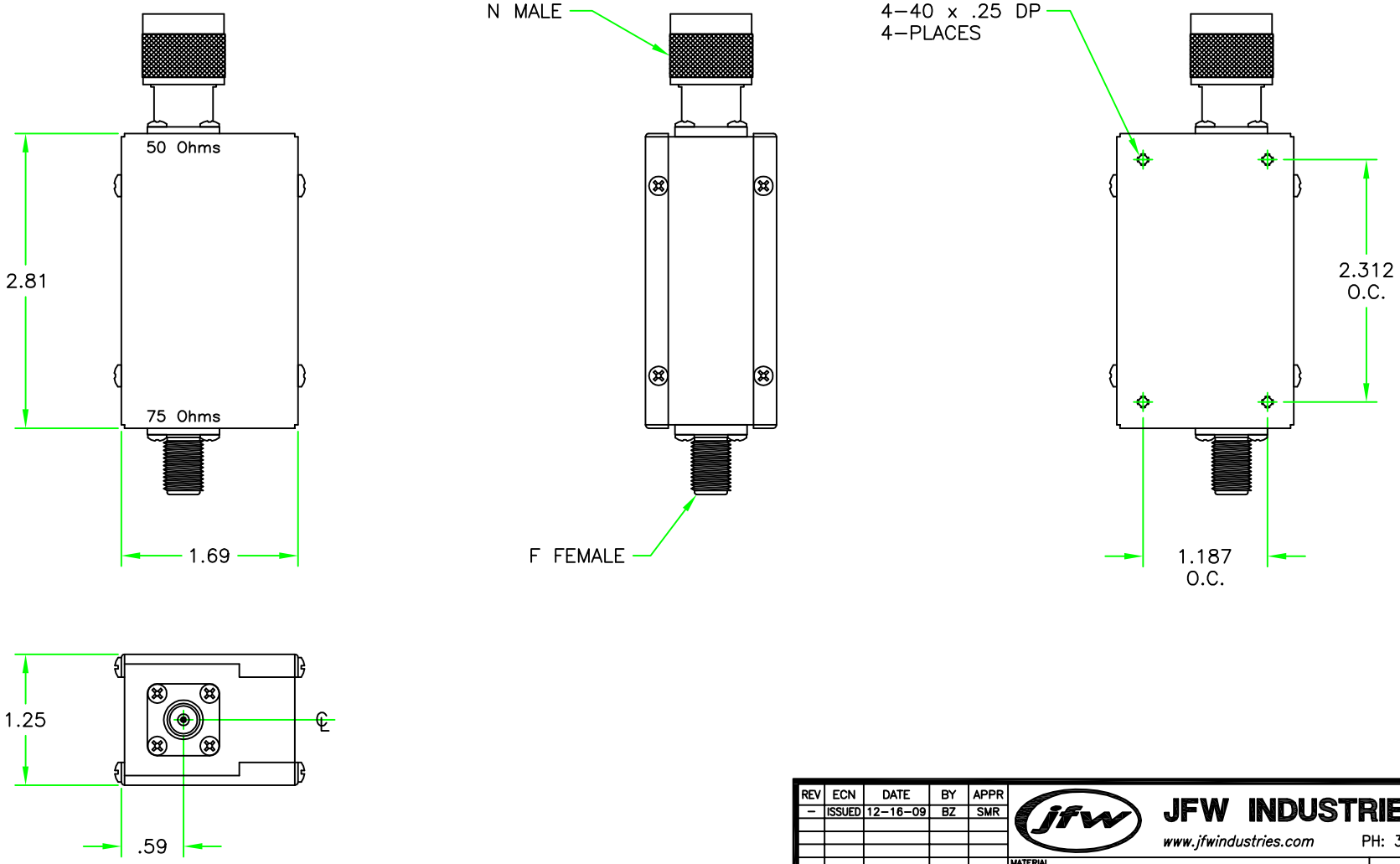

REV	ECN	DATE	BY	APPR
–	ISSUED	12-16-09	BZ	SMR

JFW INDUSTRIES, INC.
www.jfwindustries.com PH: 317-887-1340

MATERIAL	BRASS	PROPRIETARY INFORMATION
FINISH	NICKEL	ALL SURFACES ARE TO BE FREE OF BURRS, PITS, & SCRATCHES
MODEL 57ZTT-AA N M/F F	SCALE FULL	TOLERANCES .XX±.010 .XXX±.005 XX°±.5°
DESCRIPTION IMPEDANCE MATCHING TRANSFORMER		DWG # 092-6407