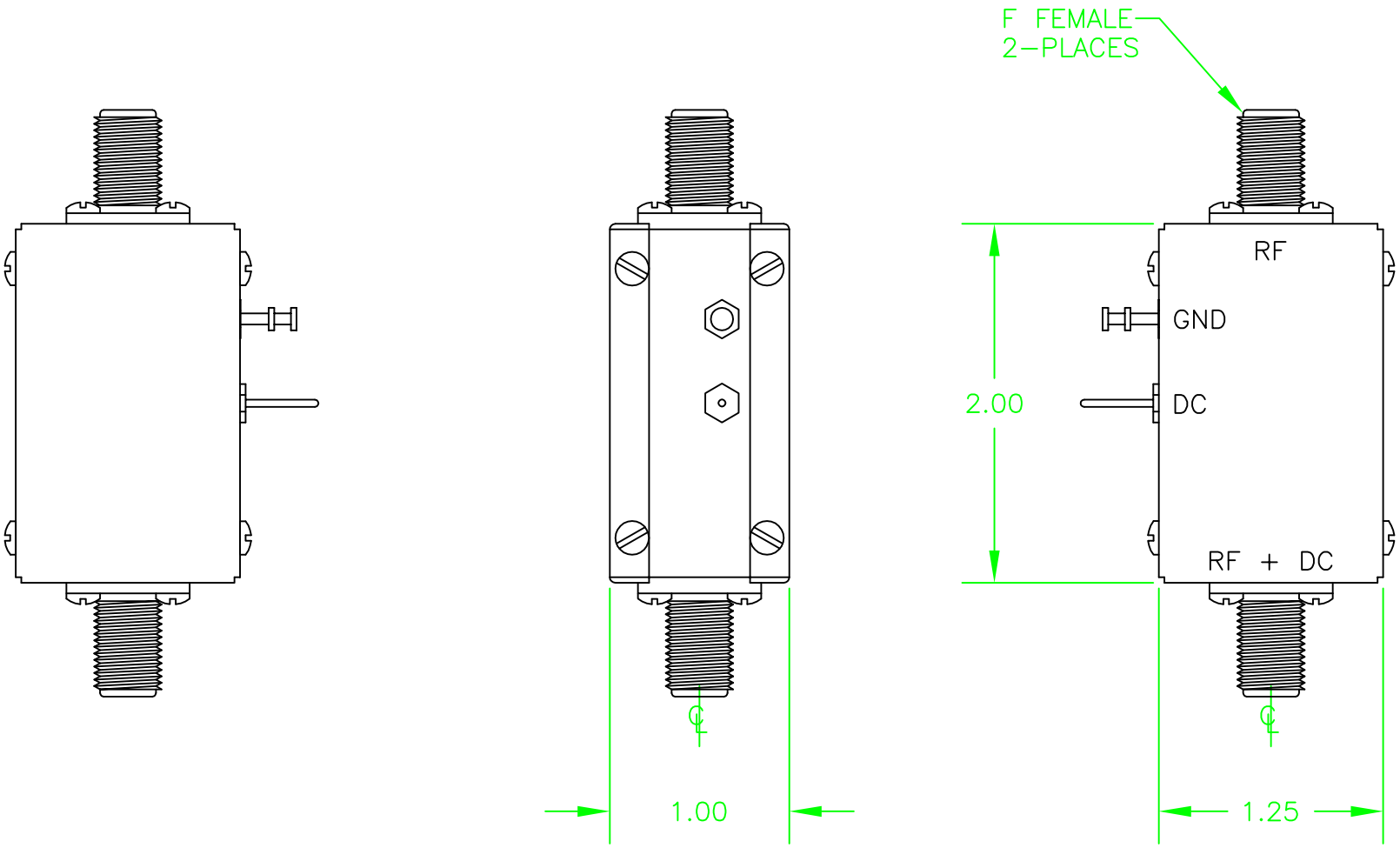

JFW INDUSTRIES, INC.

INDIANAPOLIS, IN

REV	ECN	DATE	BY
A	5849	10-27-98	PT
B	5856	11-4-98	PT
C	5860	11-9-98	TEZ
D	5922	2-10-99	PT
E	6989	1-29-02	CMB
F	7508	6-13-03	BZ

DRAWN BY: CDJ
DATE: 1-08-98
APP'D BY:
SCALE: FULL
MATERIAL: BRASS
FINISH: NICKEL
DESCRIPTION: 75BT-XXX F: BIAS TAP

PROPRIETARY INFORMATION

ALL SURFACES ARE TO BE FREE OF BURRS, PITS, & SCRATCHES

TOLERANCES
FRACTIONAL DIM. ± 1/64
2 PLACE DECIMAL ± .010
3 PLACE DECIMAL ± .005
ANGULAR DIM. ± 1/2°

DWG NO. 092-2712