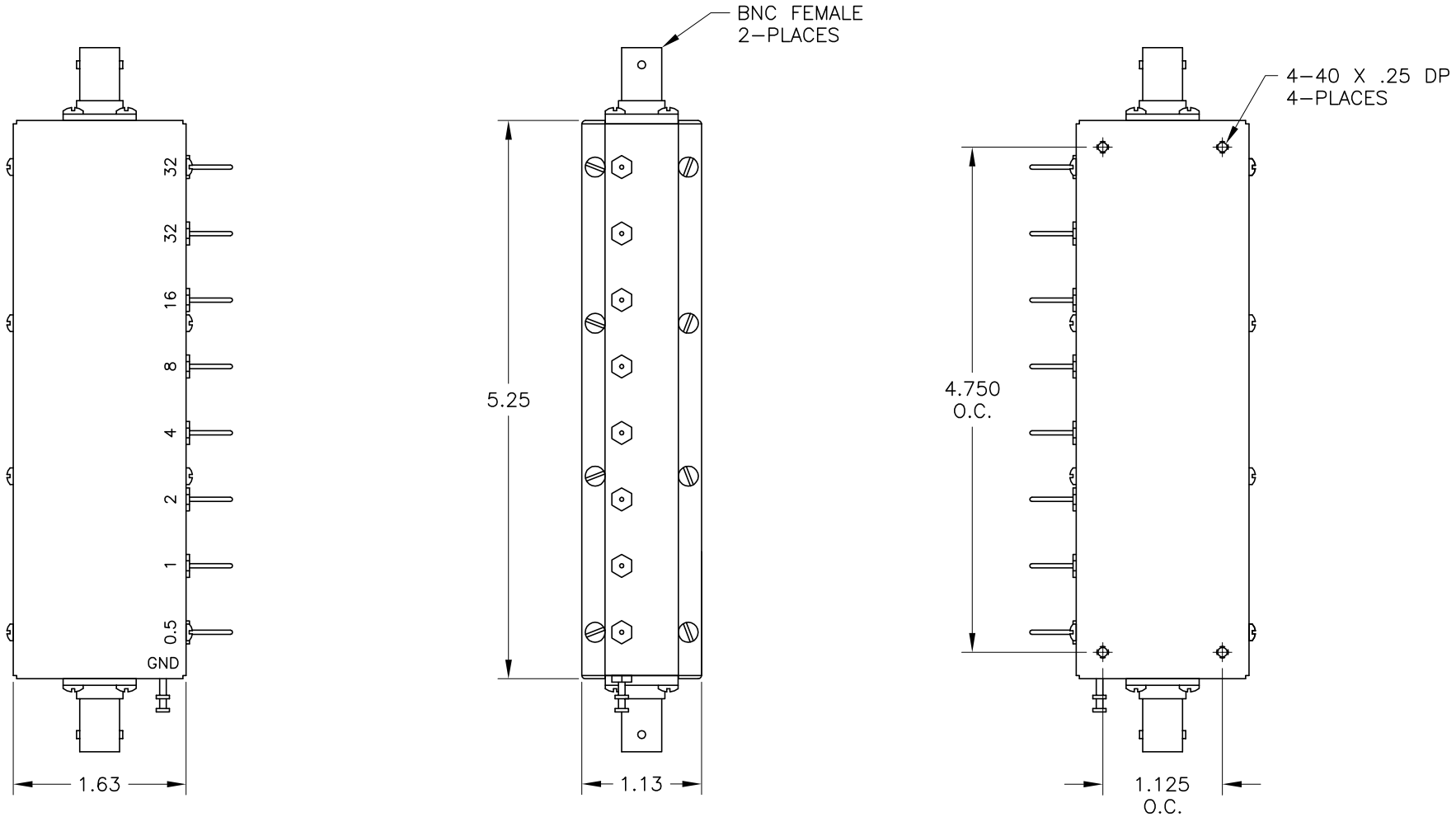

JFW INDUSTRIES, INC.
INDIANAPOLIS, IN

REV	ECN	DATE	BY
A	14428	7-23-07	BZ

DRAWN BY	L. TABOR
DATE	7-22-05
APP'D BY	
SCALE	FULL
MATERIAL	BRASS
FINISH	NICKEL
DESCRIPTION	75P-XXX: PROG. ATTEN.

PROPRIETARY INFORMATION

ALL SURFACES ARE TO BE FREE OF BURRS, PITS, & SCRATCHES

TOLERANCES

FRACTIONAL DIM. ± 1/64

2 PLACE DECIMAL ±.010

3 PLACE DECIMAL ±.005

ANGULAR DIM. ± 1/2°

DWG NO. 092-4875