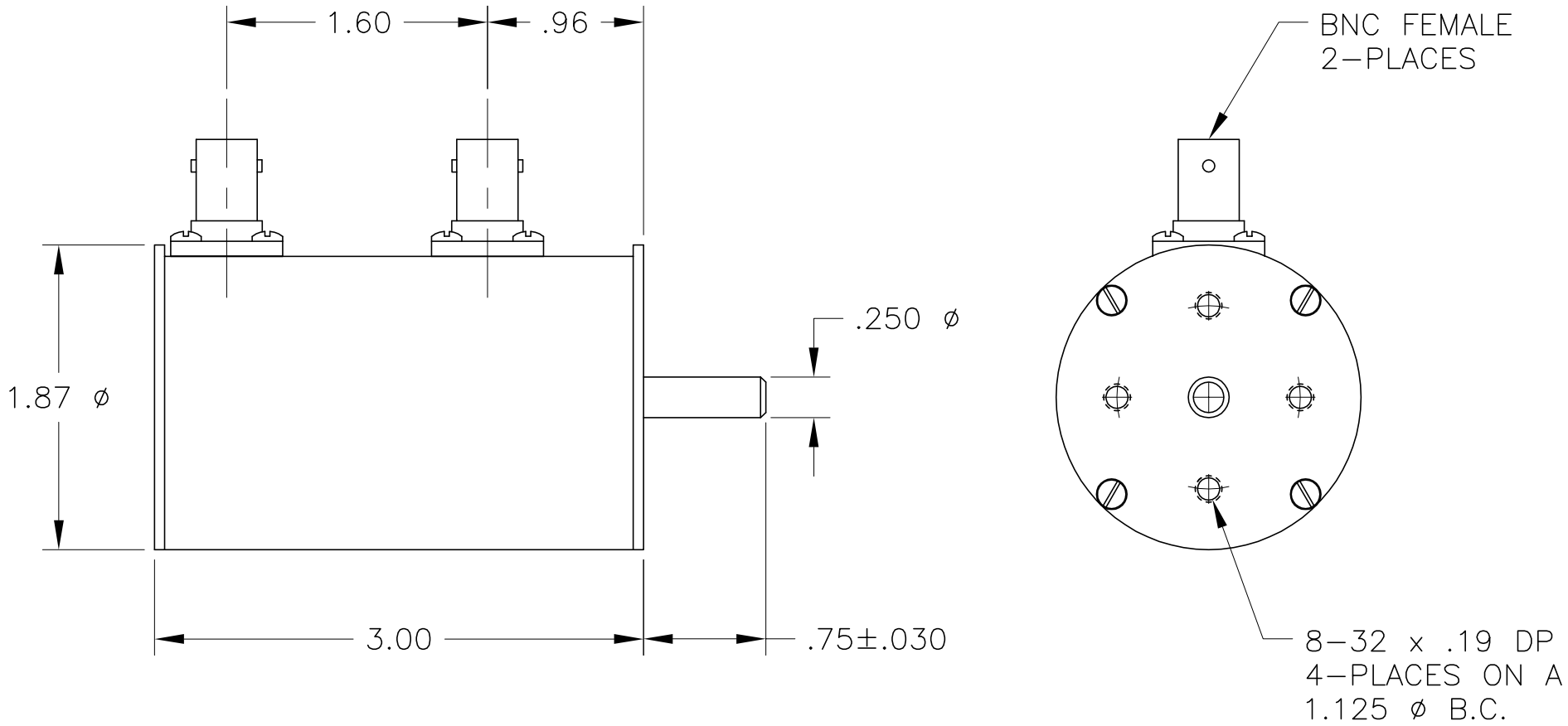

REV	ECN	DATE	BY	APPR
–	ISSUED	6-8-09	BZ	TRS

JFW INDUSTRIES, INC.

www.jfwindustries.com PH: 317-887-1340

MATERIAL: ALUMINUM ALLOY		PROPRIETARY INFORMATION
FINISH: CHEMFILM TCP		ALL SURFACES ARE TO BE FREE OF BURRS, PITS, & SCRATCHES
MODEL: XXR-XXX	SCALE: FULL	TOLERANCES .XX±.010 .XXX±.005 XX°±.5°
DESCRIPTION: ROTARY ATTENUATOR		DWG #: 092-003-01