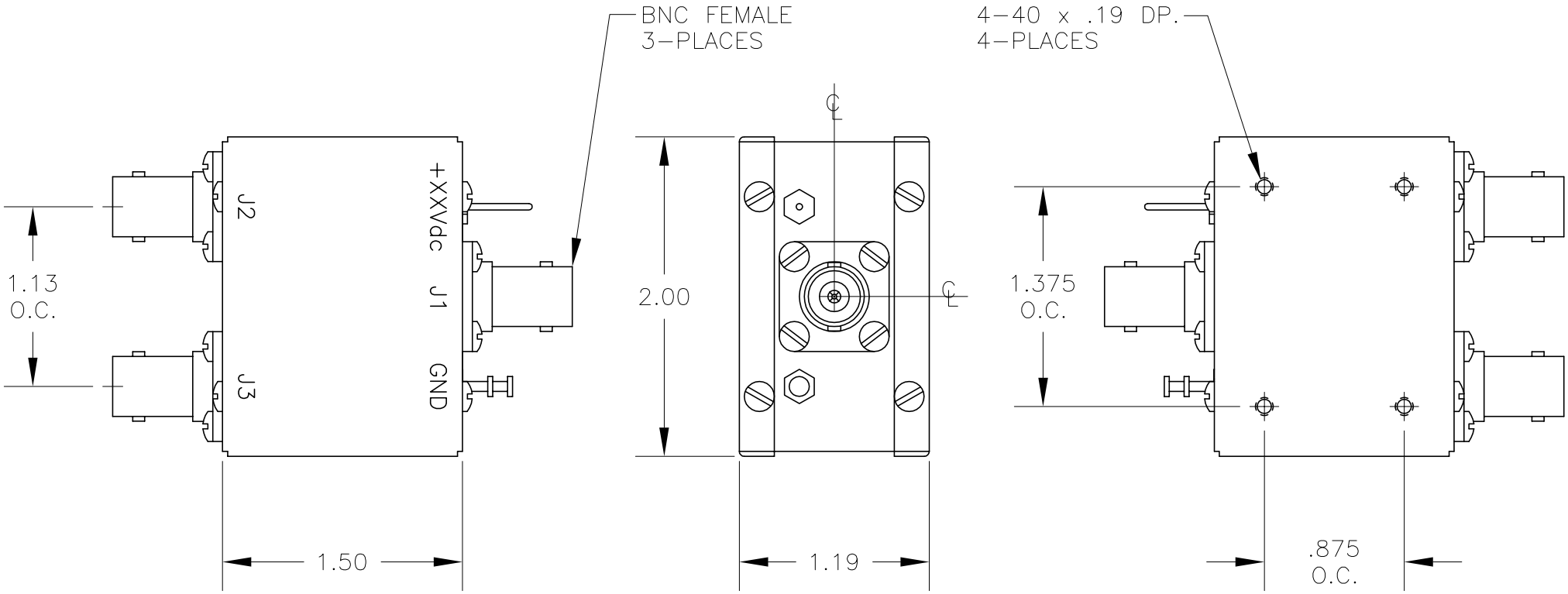

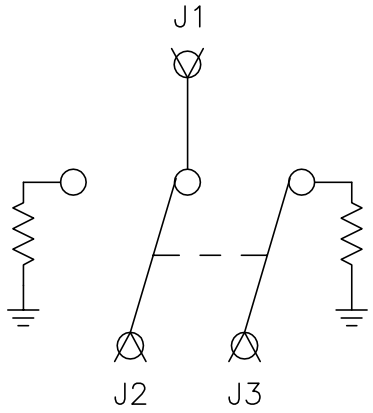

SHOWN WITH NO POWER APPLIED

JFW INDUSTRIES, INC.
INDIANAPOLIS, IN

REV	ECN	DATE	BY
A	5780	8-25-98	CDJ
B	5812	9-24-98	CDJ
C	6286	6-2-00	CMB
D	6989	1-28-02	CMB

DRAWN BY: CDJ
DATE: 8-25-98
APP'D BY:
SCALE: FULL
MATERIAL: BRASS
FINISH: NICKEL
DESCRIPTION: 1P2T COAX. SWITCH

PROPRIETARY INFORMATION

ALL SURFACES ARE TO BE FREE OF BURRS, PITS, & SCRATCHES

TOLERANCES
FRACTIONAL DIM. ± 1/64
2 PLACE DECIMAL ±.010
3 PLACE DECIMAL ±.005
ANGULAR DIM. ± 1/2°

DWG NO. 092-1254