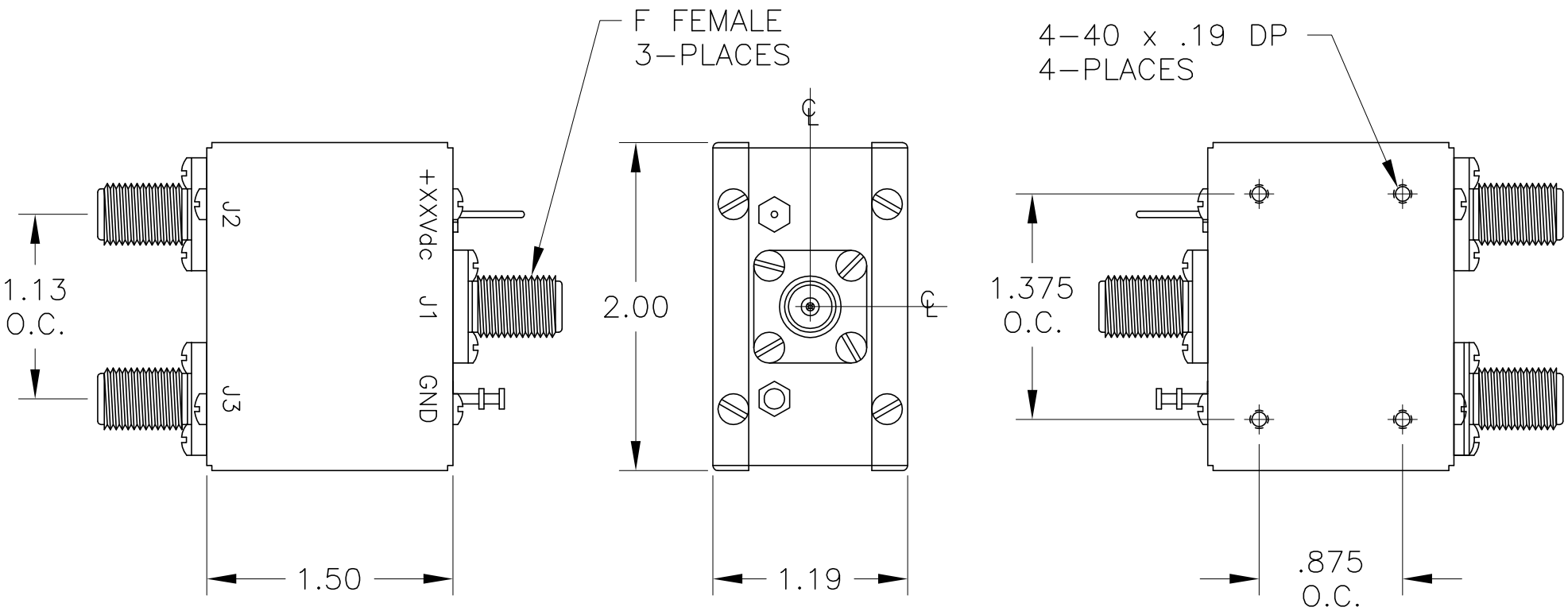

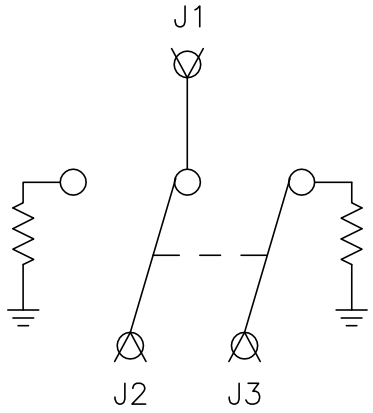

SHOWN WITH NO POWER APPLIED

JFW INDUSTRIES, INC.
INDIANAPOLIS, IN

REV	ECN	DATE	BY

DRAWN BY	L. TABOR
DATE	7-11-05
APP'D BY	
SCALE	FULL
MATERIAL	BRASS
FINISH	NICKEL
DESCRIPTION	1P2T COAX. SWITCH

PROPRIETARY INFORMATION

ALL SURFACES ARE TO BE FREE OF BURRS, PITS, & SCRATCHES

TOLERANCES

FRACTIONAL DIM. ± 1/64

2 PLACE DECIMAL ± .010

3 PLACE DECIMAL ± .005

ANGULAR DIM. ± 1/2°

DWG NO. 092-4860