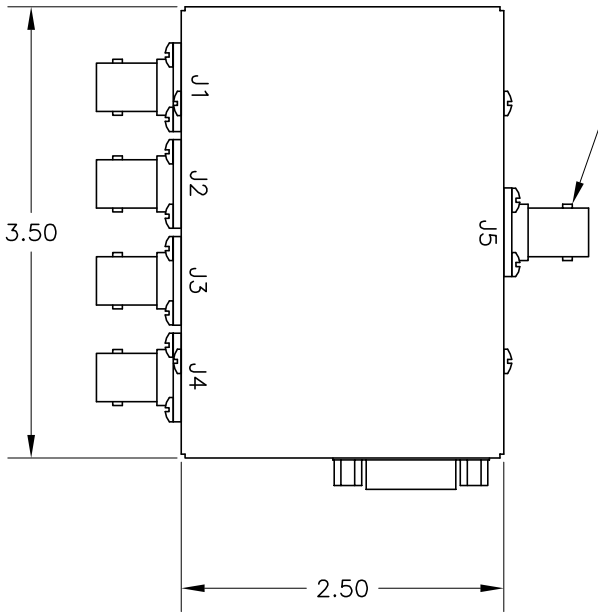

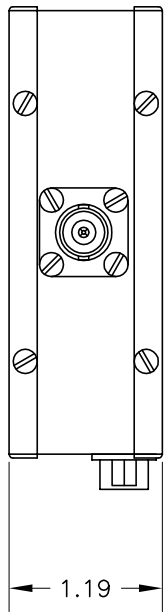

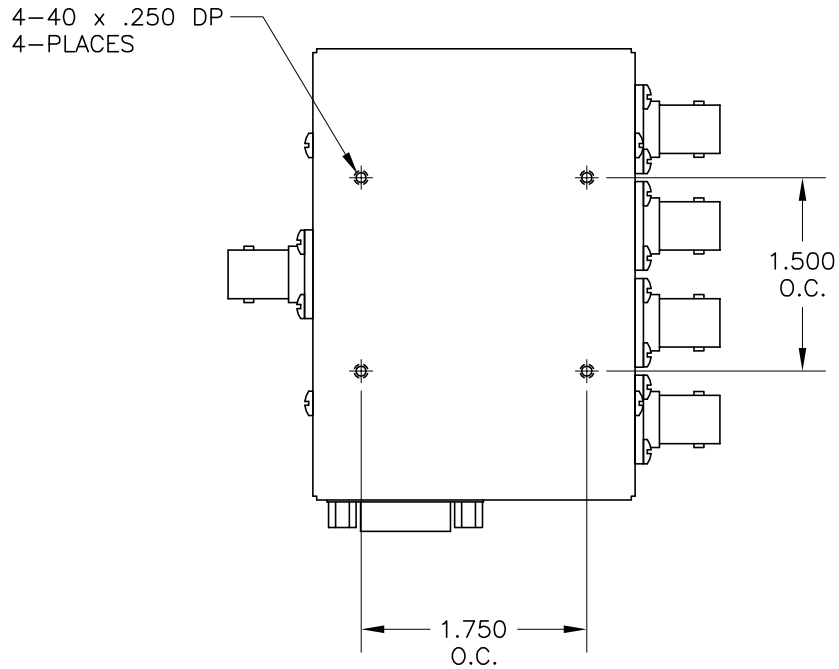

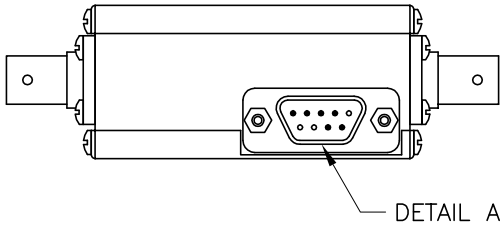

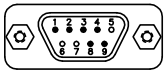

DETAIL A
DE-9P

PIN	FUNCTION
1	TTL CONT. 1
2	TTL CONT. 2
3	TTL CONT. 3
4	TTL CONT. 4
5	NO CONNECTION
6	NO CONNECTION
7	NO CONNECTION
8	+Vdc
9	GROUND

JFW INDUSTRIES, INC.
INDIANAPOLIS, IN

REV	ECN	DATE	BY
A	12935	6-16-06	TEZ

DRAWN BY: T. ZEISS
DATE: 7-27-98
APP'D BY:
SCALE: FULL
MATERIAL: BRASS
FINISH: NICKEL
DESCRIPTION: 75S-XXX: 1P4T SWITCH

PROPRIETARY INFORMATION
ALL SURFACES ARE TO BE FREE OF BURRS, PITS, & SCRATCHES
TOLERANCES
FRACTIONAL DIM. ± 1/64
2 PLACE DECIMAL ±.010
3 PLACE DECIMAL ±.005
ANGULAR DIM. ± 1/2°
DWG NO. 092-2850