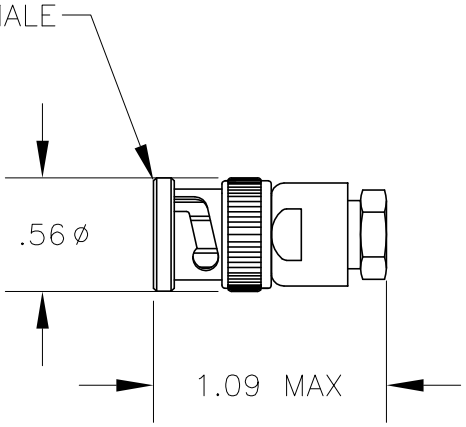

JFW INDUSTRIES, INC.
INDIANAPOLIS, IN

REV	ECN	DATE	BY
A	5338	8-06-97	CDJ
B	7094	4-23-02	CMB
C	12635	4-21-06	ETW

DRAWN BY: CDJ
DATE: 8-06-97
APP'D BY:
SCALE: FULL
MATERIAL:
FINISH:
DESCRIPTION: 75T-001 : TERMINATION

PROPRIETARY INFORMATION

ALL SURFACES ARE TO BE FREE OF BURRS, PITS, & SCRATCHES

TOLERANCES
FRACTIONAL DIM. ± 1/64
2 PLACE DECIMAL ± .010
3 PLACE DECIMAL ± .005
ANGULAR DIM. ± 1/2°

DWG NO. 092-640