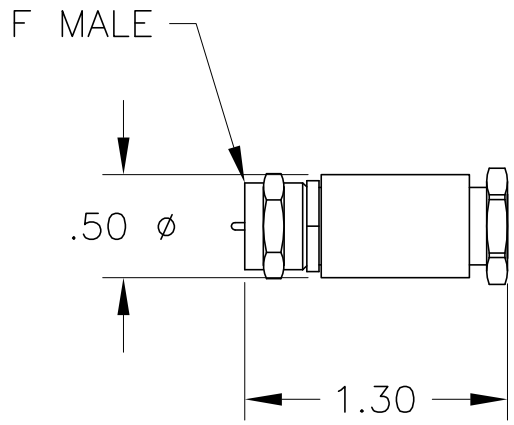

JFW INDUSTRIES, INC.
INDIANAPOLIS, IN

REV	ECN	DATE	BY

DRAWN BY	T. ZEISS	DATE	9-25-07
APP'D BY		SCALE	FULL
MATERIAL			
FINISH			
DESCRIPTION	75T-XXX: TERMINATION		

PROPRIETARY INFORMATION

ALL SURFACES ARE TO BE FREE OF BURRS, PITS, & SCRATCHES

TOLERANCES

FRACTIONAL DIM. ± 1/64

2 PLACE DECIMAL ±.010

3 PLACE DECIMAL ±.005

ANGULAR DIM. ± 1/2°

DWG NO. 092-5579