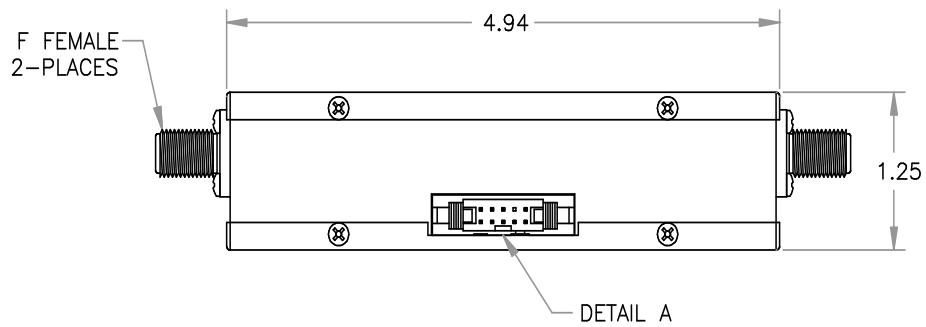

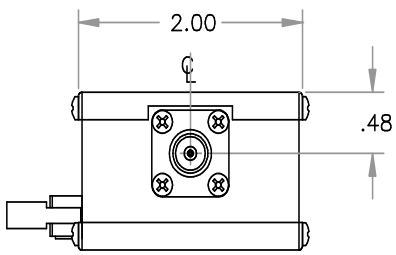

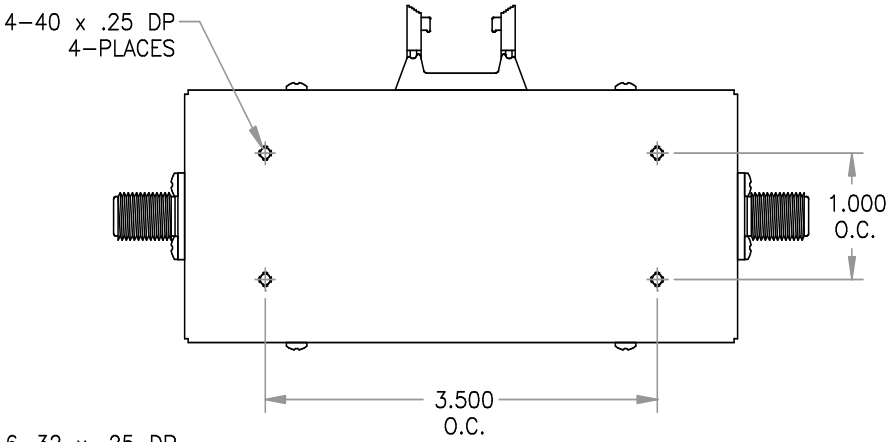

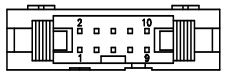

DETAIL A
3M# 3793–5303

PIN	FUNCTION
1	1dB TTL CONTROL
2	2dB TTL CONTROL
3	4dB TTL CONTROL
4	8dB TTL CONTROL
5	16dB TTL CONTROL
6	32dB TTL CONTROL
7	64dB TTL CONTROL
8	NO CONNECTION
9	+5 Vdc
10	GROUND

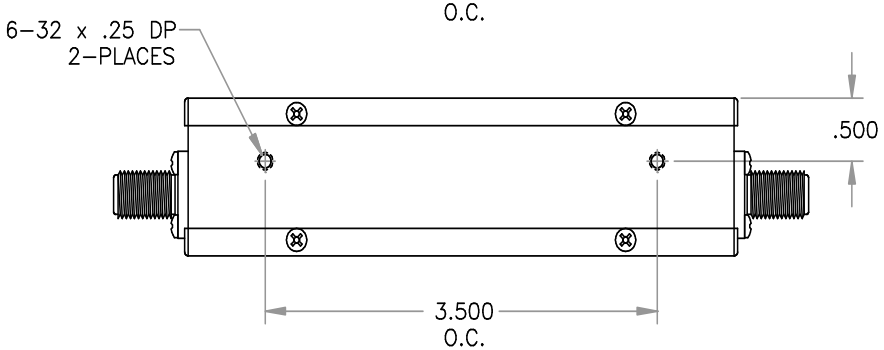

JFW INDUSTRIES, INC.
INDIANAPOLIS, IN

REV	ECN	DATE	BY

DRAWN BY	T. ZEISS	DATE	5–8–08
APP'D BY		SCALE	FULL
MATERIAL	BRASS		
FINISH	NICKEL		
DESCRIPTION	75P–XXXX: PROG. ATTEN.		

PROPRIETARY INFORMATION

ALL SURFACES ARE TO BE FREE OF BURRS, PITS, & SCRATCHES

TOLERANCES
FRACTIONAL DIM. ± 1/64
2 PLACE DECIMAL ± .010
3 PLACE DECIMAL ± .005
ANGULAR DIM. ± 1/2 °

DWG NO. 092–5781