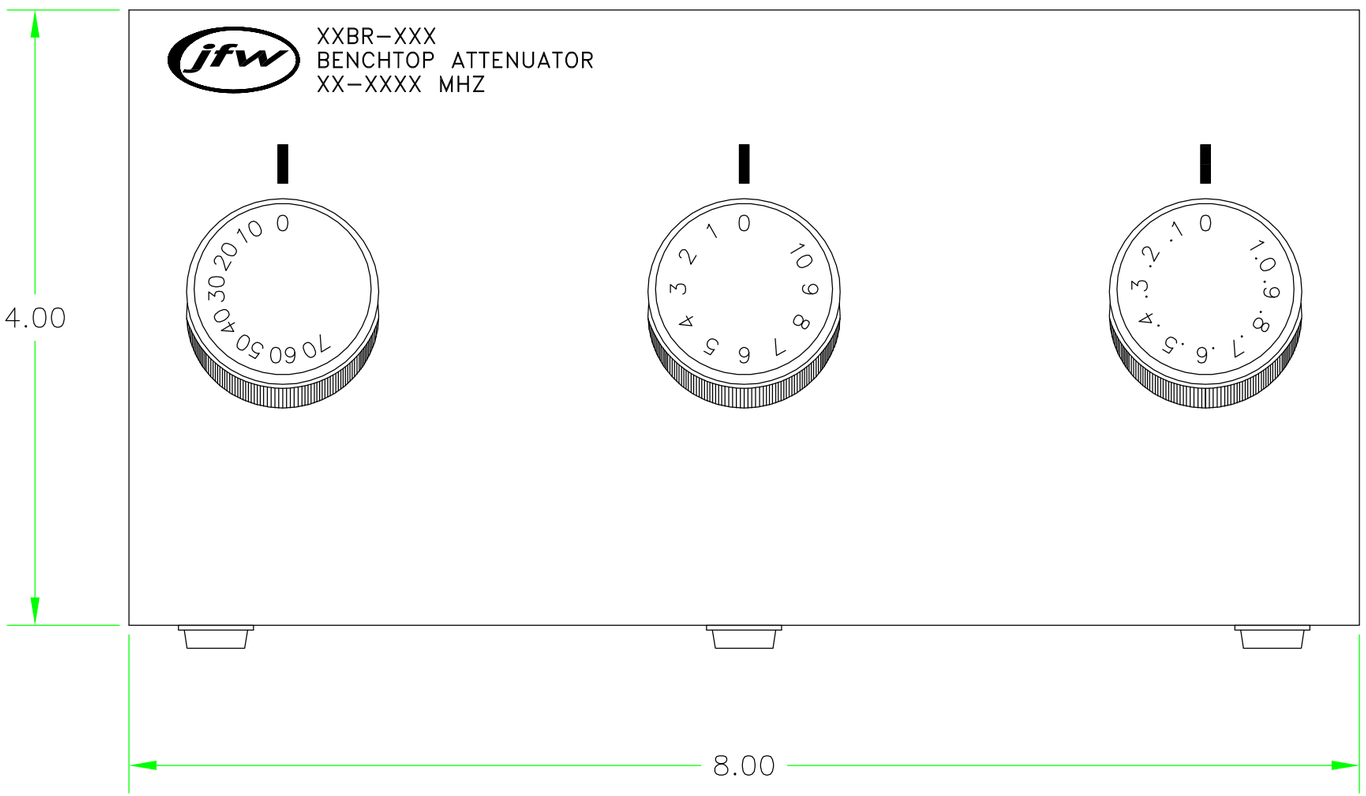

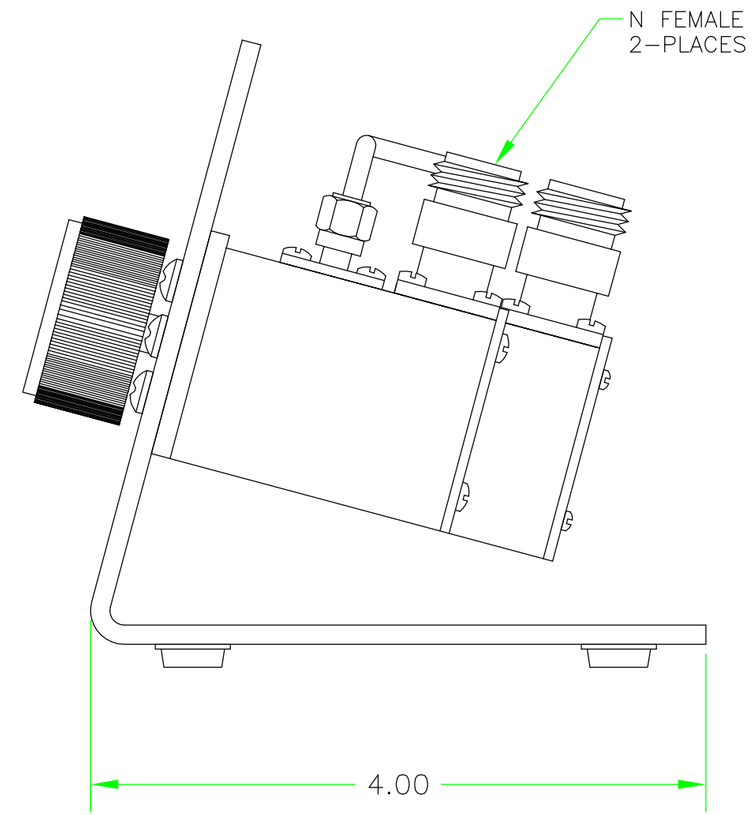

KNOB SCREENING PER MODEL – 0–81dB SHOWN

NOTE: AVAILABLE WITH BNC, N, SMA, OR TNC CONNECTORS

REV	ECN	DATE	BY	APPR
–	ISSUED	-----	--	--
A	2307	1–3–89	TEZ	FDW
B	7562	9–30–03	BZ	TEZ
C	10840	3–16–05	LT	TEZ
D	12635	4–20–06	ETW	TEZ
E	24264	6–23–14	TEZ	TEZ

JFW INDUSTRIES, INC.

www.jfwindustries.com PH: 317–887–1340

MATERIAL: ALUMINUM ALLOY		PROPRIETARY INFORMATION
FINISH: ATTEN: CLEAR / BRACKET: BLACK ANODIZE		ALL SURFACES ARE TO BE FREE OF BURRS, PITS, & SCRATCHES
MODEL: XXBR–XXX	SCALE: FULL	TOLERANCES .XX±.010 .XXX±.005 XX°±.5°
DESCRIPTION: BENCH ATTENUATOR		DWG #: 092–1085