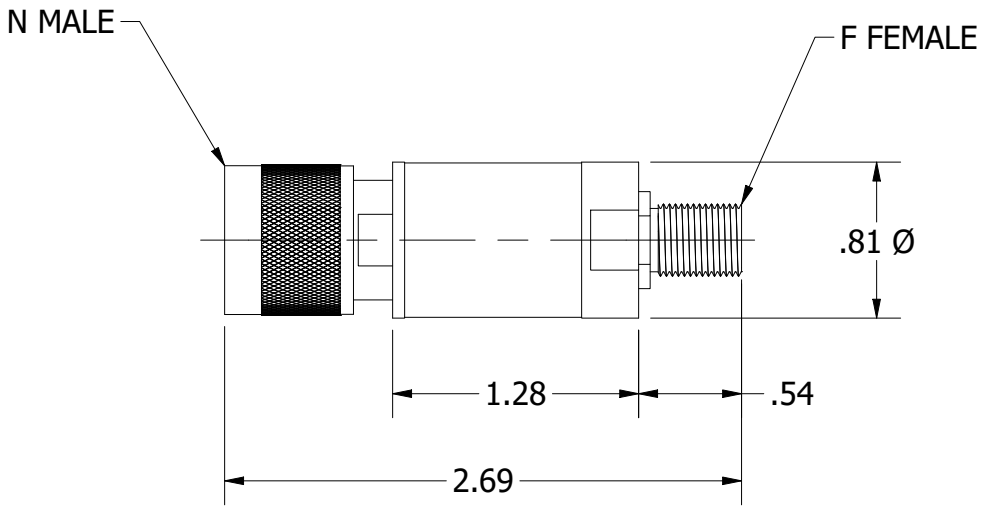

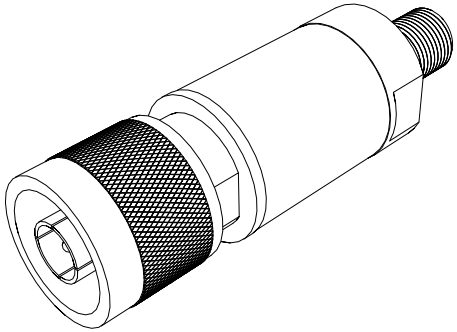

REV	ECN	DATE	BY	APPR
-	ISSUED	1-21-99	PT	FDW
A	24444	10-23-19	GM	TEZ

JFW INDUSTRIES, INC.

www.jfwindustries.com PH: 317-887-1340

MATERIAL	BRASS	PROPRIETARY INFORMATION
FINISH	NICKEL	ALL SURFACES ARE TO BE FREE OF BURRS, PITS & SCRATCHES
MODEL 57ZT-1.2G NM/FF	SCALE FULL	TOLERANCES .XX±.010 .XXX±.005 XX°±.5°
DESCRIPTION IMPEDANCE MATCHING TRANSFORMER		DWG # 092-2958