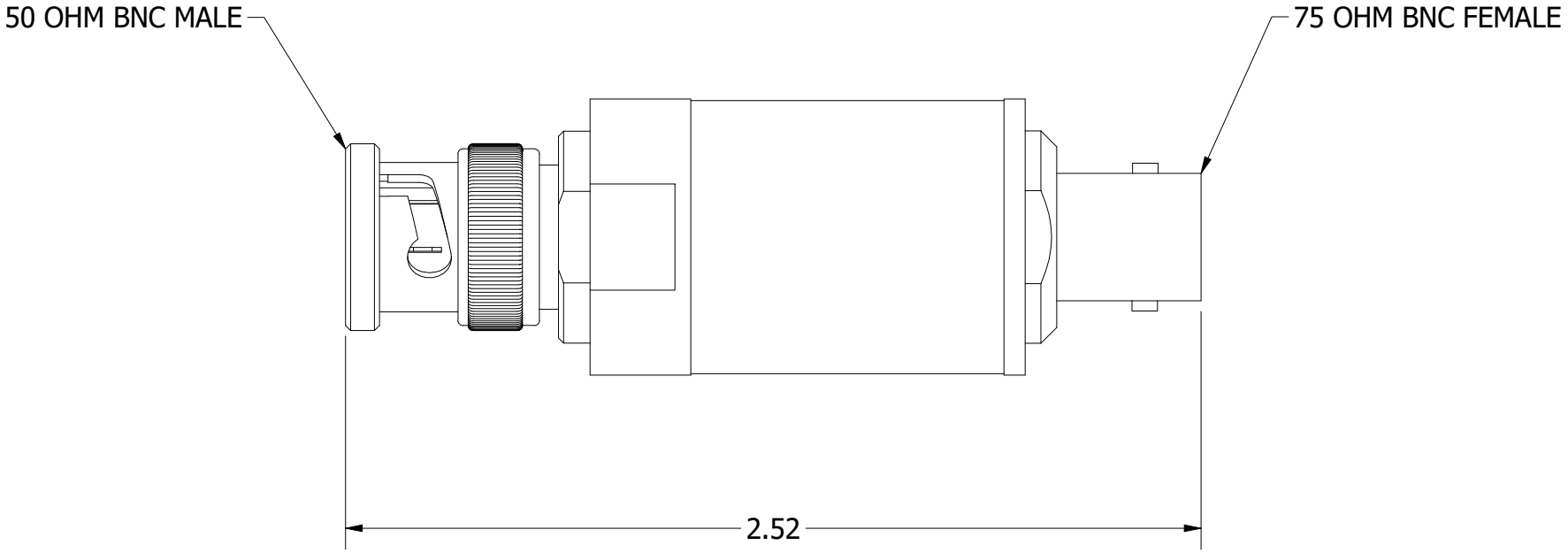

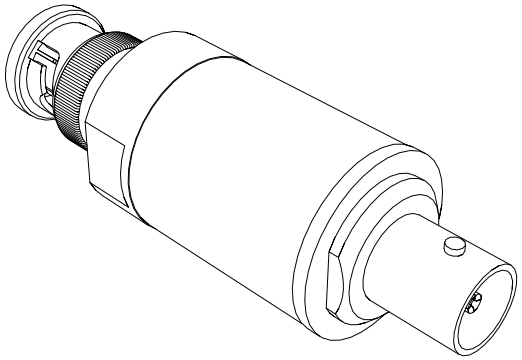

REV	ECN	DATE	BY	APPR
-	ISSUED	8-12-04	TEZ	TEZ
A	24444	9-13-19	GM	JZ

JFW INDUSTRIES, INC.

www.jfwindustries.com PH: 317-887-1340

MATERIAL

PROPRIETARY INFORMATION

FINISH

ALL SURFACES ARE TO BE FREE OF BURRS, PITS & SCRATCHES

MODEL 57Z-3G

SCALE x2

TOLERANCES .XX±.010 .XXX±.005 XX°±.5°

DESCRIPTION MATCHING PAD

DWG # 092-4560