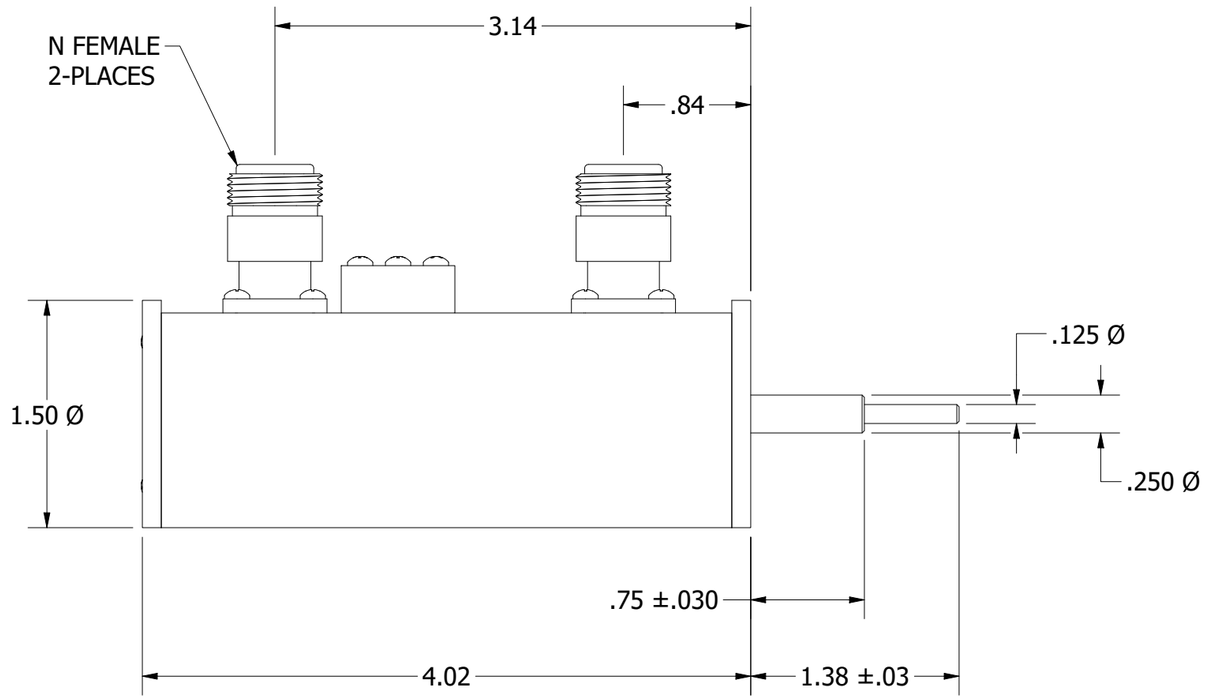

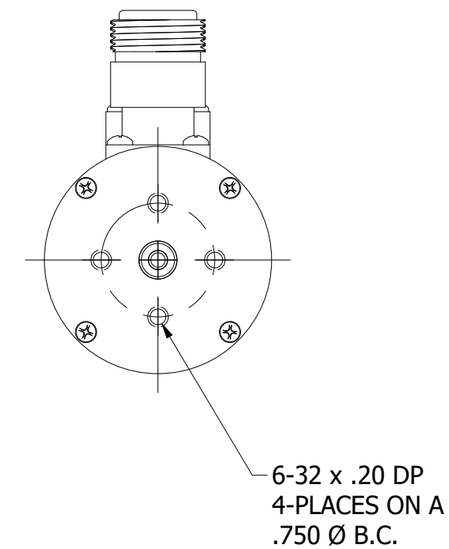

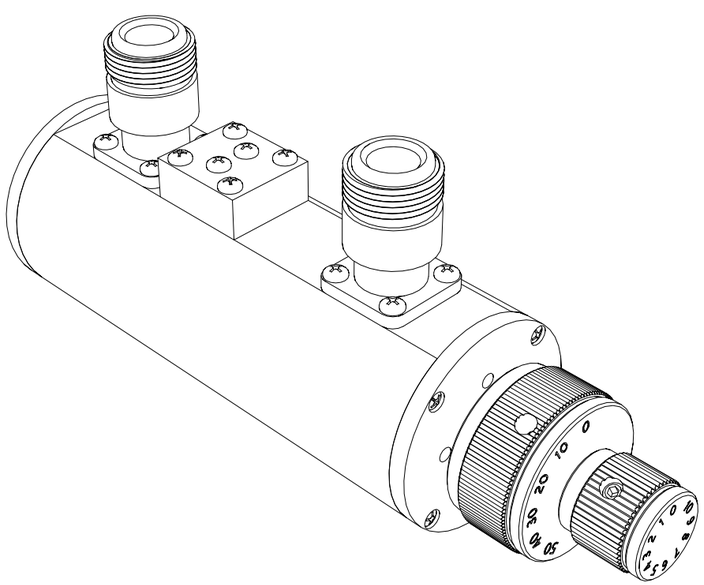

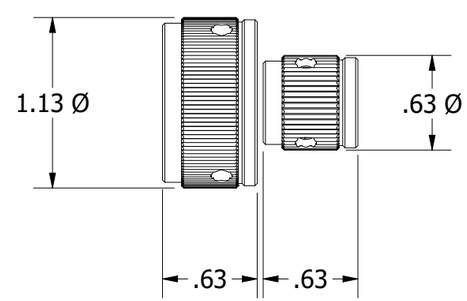

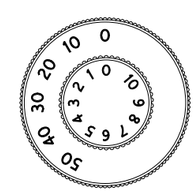

REV	ECN	DATE	BY	APPR
-	ISSUED	5-20-09	DTS	TRS
A	24444	10-17-19	GM	TEZ

JFW INDUSTRIES, INC.

www.jfwindustries.com PH: 317-887-1340

MATERIAL	ALUMINUM ALLOY		PROPRIETARY INFORMATION
FINISH	CHEMFILM TCP		ALL SURFACES ARE TO BE FREE OF BURRS, PITS & SCRATCHES
MODEL	50DR-XXX	SCALE FULL	TOLERANCES .XX±.010 .XXX±.005 XX°±.5°
DESCRIPTION	0-60dB ROTARY ATTENUATOR		DWG # 092-327-05