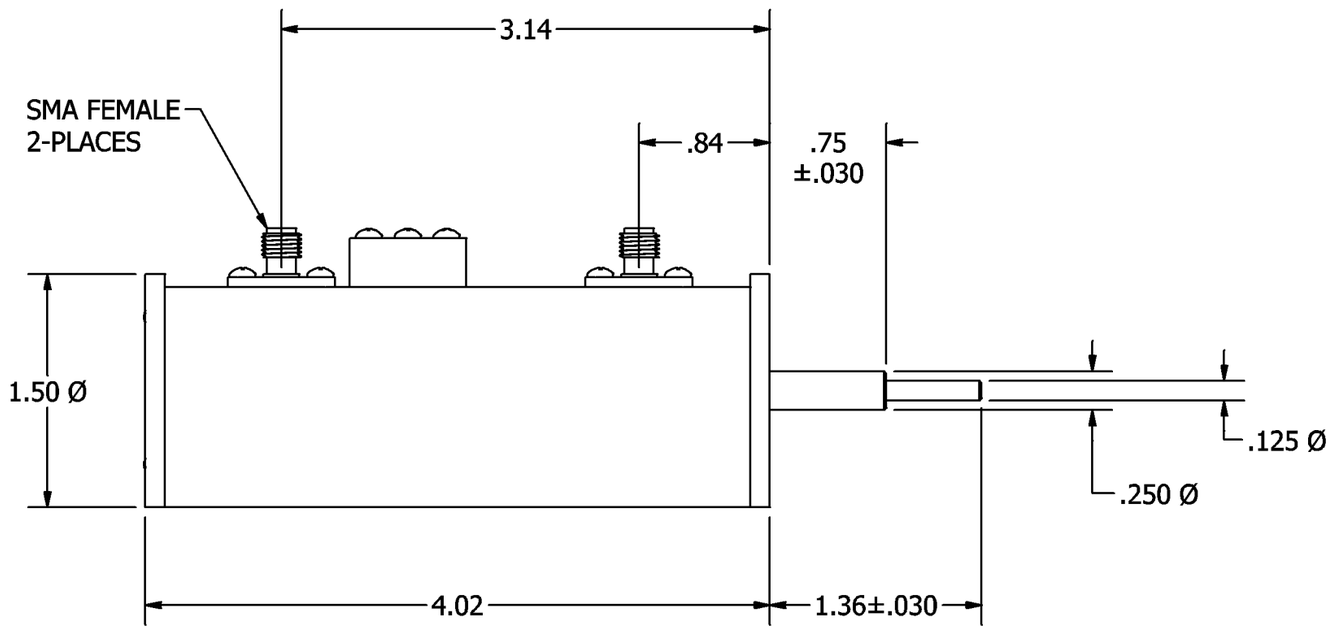

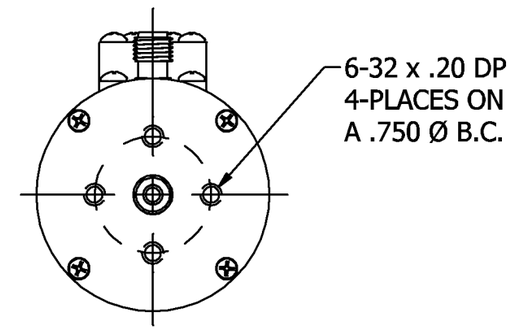

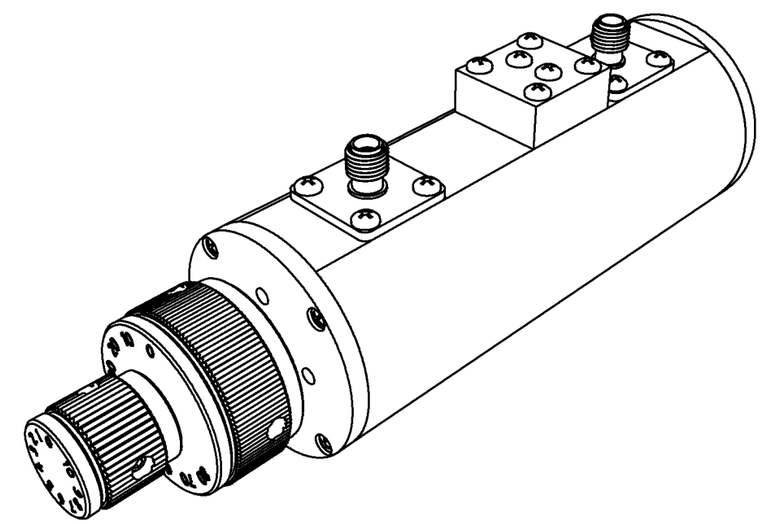

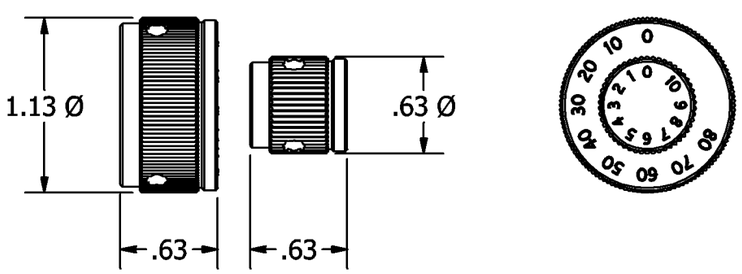

KNOB DETAIL

REV	ECN	DATE	BY	APPR
-	ISSUED	5-20-09	DTS	TRS
A	24170	5-28-14	JZ	TEZ
B	24444	4-24-20	GM	JZ

JFW INDUSTRIES, INC.

www.jfwindustries.com PH: 317-887-1340

MATERIAL: ALUMINUM ALLOY		PROPRIETARY INFORMATION
FINISH: CHEMFILM TCP		ALL SURFACES ARE TO BE FREE OF BURRS, PITS & SCRATCHES
MODEL: 50DR-XXX	SCALE: FULL	TOLERANCES .XX±.010 .XXX±.005 XX°±.5°
DESCRIPTION: 0-90dB ROTARY ATTENUATOR		DWG #: 092-440-02