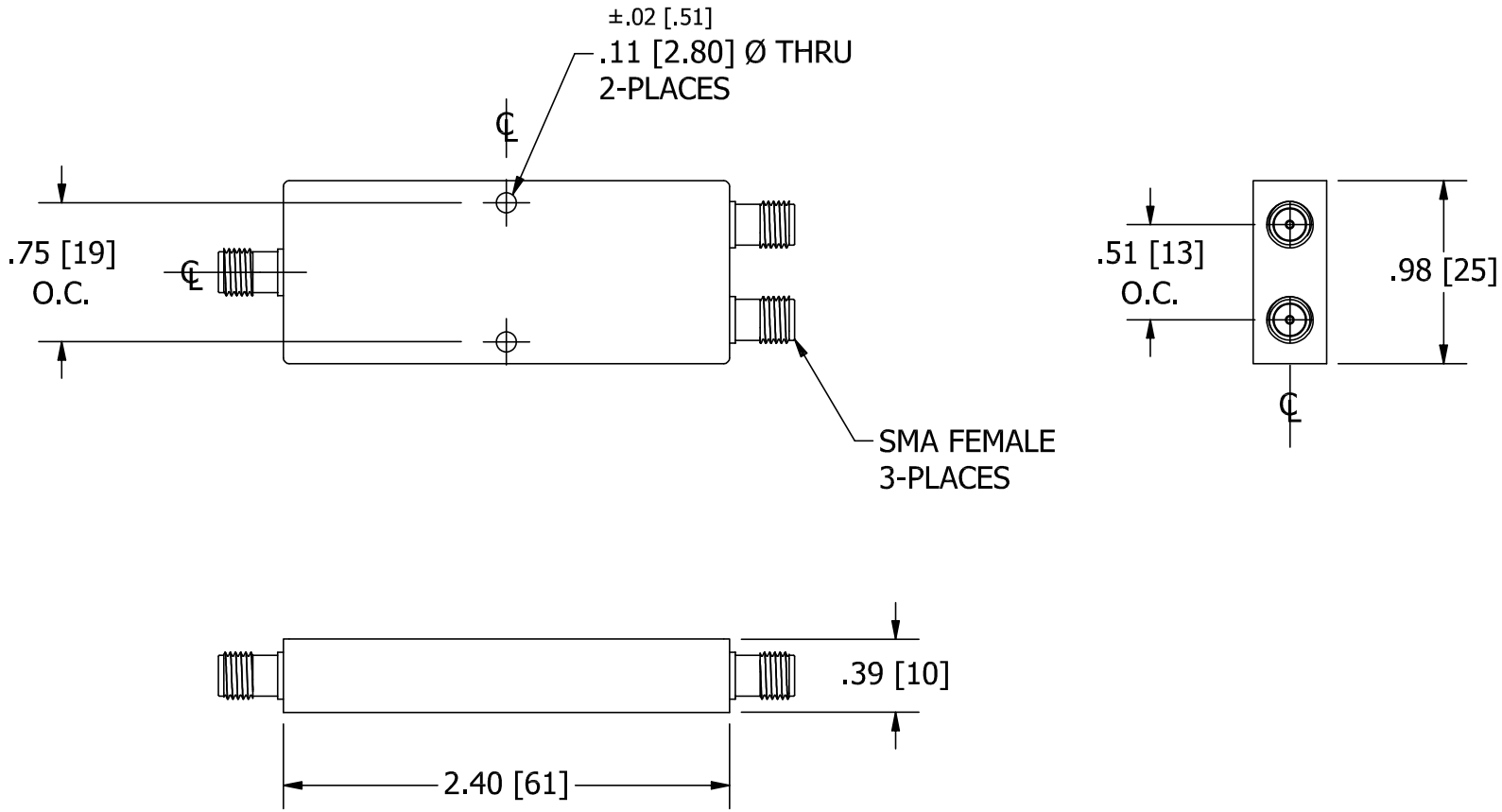

NOTE: DIMENSIONS ARE IN INCHES [MILLIMETERS]

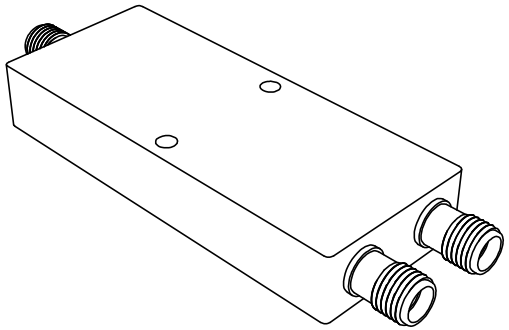

REV	ECN	DATE	BY	APPR
-	ISSUED	9-12-2023	GM	JZ

JFW INDUSTRIES, INC.

www.jfwindustries.com PH: 317-887-1340

MATERIAL	ALUMINUM ALLOY		PROPRIETARY INFORMATION
FINISH	GRAY PAINT		ALL SURFACES ARE TO BE FREE OF BURRS, PITS & SCRATCHES
MODEL	50PD-XXX	SCALE FULL	TOLERANCES .XX±.010 .XXX±.005 XX°±.5°
DESCRIPTION	2WAY POWER DIVIDER		DWG # 092-10151