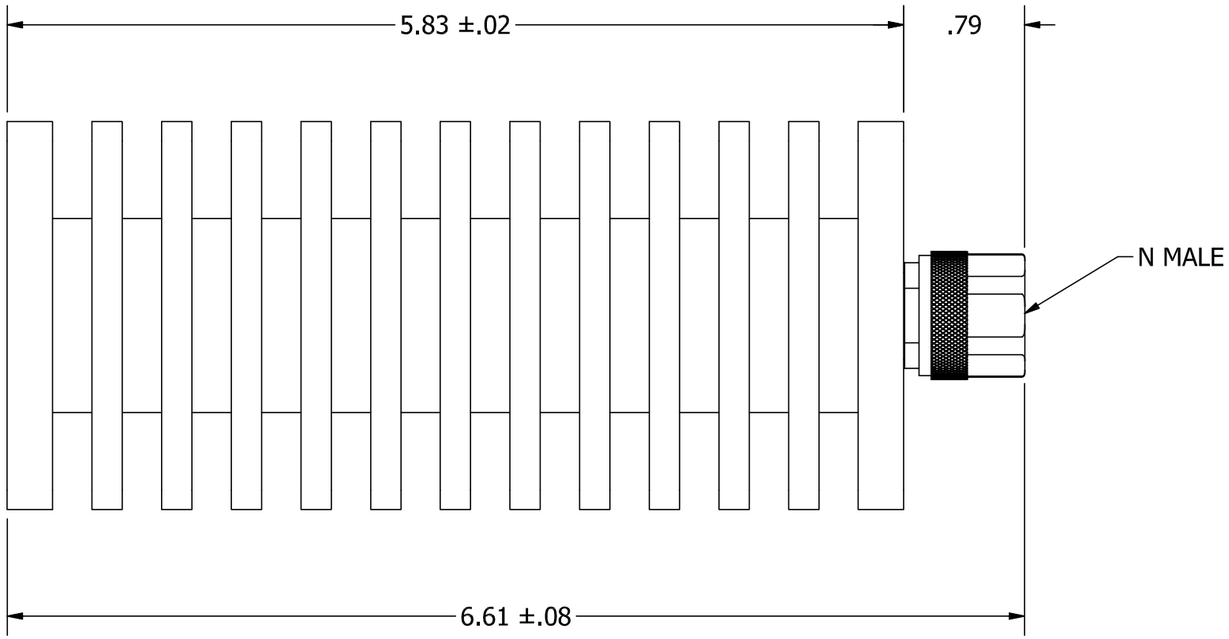

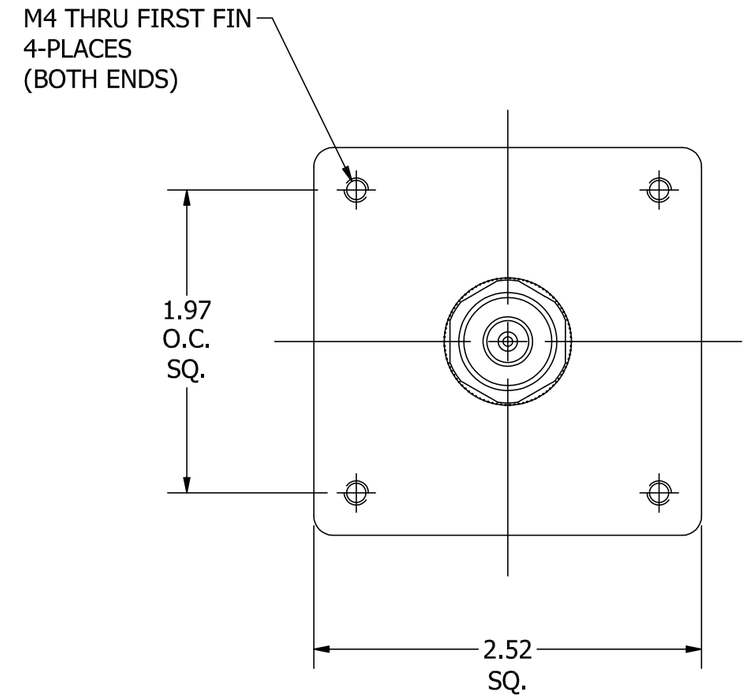

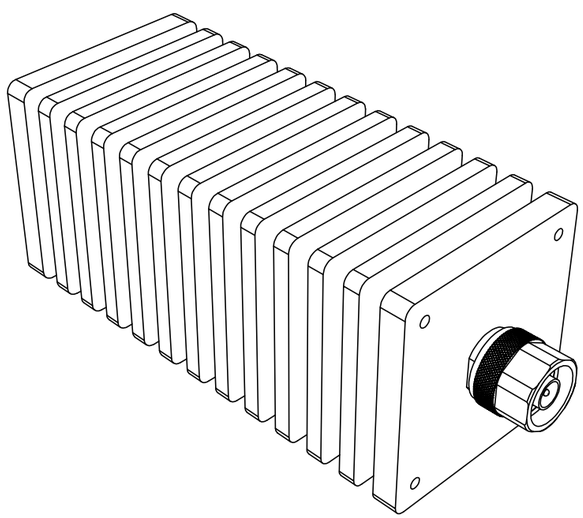

REV	ECN	DATE	BY	APPR
-	ISSUED	11-1-2023	JZ	TRS

JFW INDUSTRIES, INC.

www.jfwindustries.com PH: 317-887-1340

MATERIAL: BODY: ALUMINUM / CONNECTOR: BRASS		PROPRIETARY INFORMATION
FINISH: BODY: BLACK ANODIZE / CONNECTOR: TRI-METAL ALLOY		ALL SURFACES ARE TO BE FREE OF BURRS, PITS & SCRATCHES
MODEL: 50T-720 N M	SCALE: FULL	TOLERANCES .XX±.010 .XXX±.005 XX°±.5°
DESCRIPTION: 100 WATT TERMINATION		DWG #: 092-10189-01