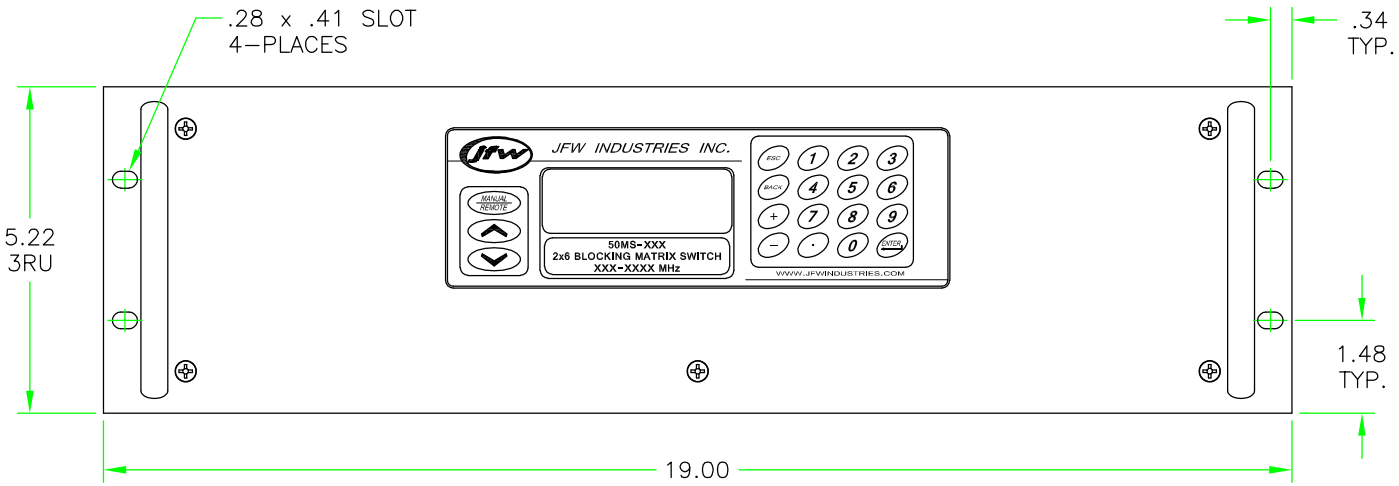

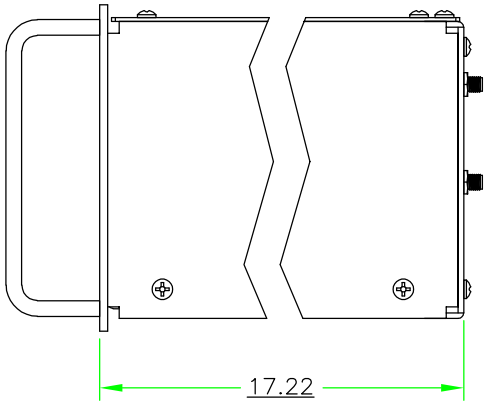

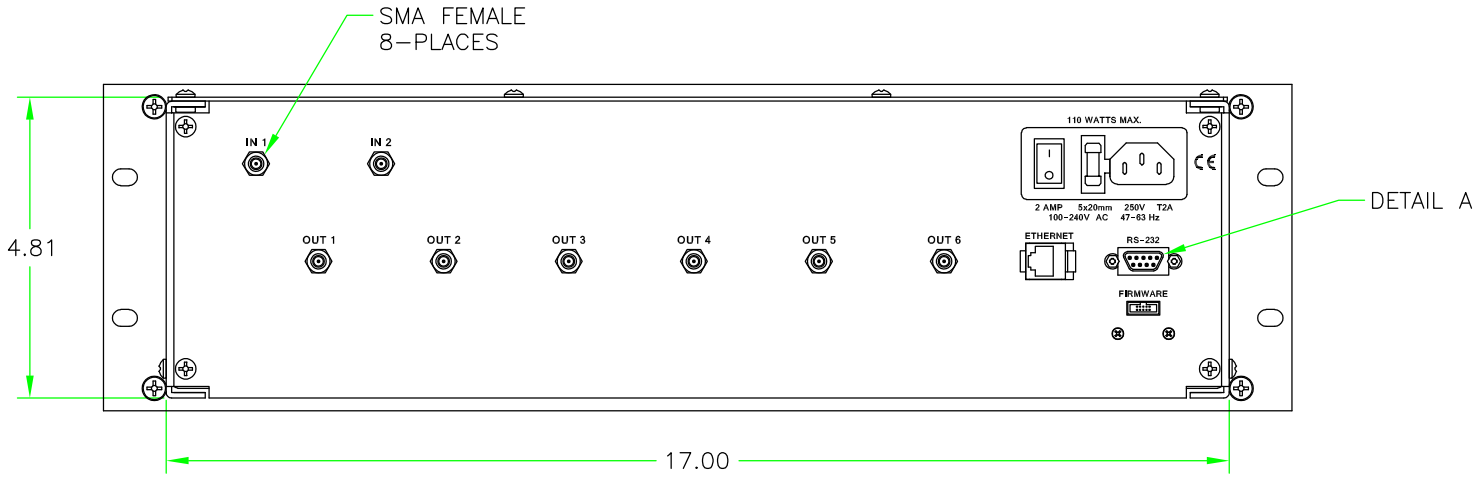

REAR VIEW

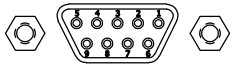

DETAIL A
DE-9S

PIN	FUNCTION
1	CHASSIS GROUND
2	RECEIVED DATA
3	TRANSMITTED DATA
4	NO CONNECTION
5	SIGNAL GROUND
6	NO CONNECTION
7	RTS
8	CTS
9	NO CONNECTION

REV	ECN	DATE	BY	APPR
–	ISSUED	5-15-2024	JZ	BAC

JFW INDUSTRIES, INC.
www.jfwindustries.com PH: 317-887-1340

MATERIAL: ALUMINUM ALLOY		PROPRIETARY INFORMATION
FINISH: CHEMFILM TCP / FRONT: BLACK		ALL SURFACES ARE TO BE FREE OF BURRS, PITS, & SCRATCHES
MODEL: 50MS-XXX	SCALE: 1/2	TOLERANCES .XX±.010 .XXX±.005 XX°±.5°
DESCRIPTION: 2x6 BLOCKING MATRIX SWITCH		DWG #: 092-10292