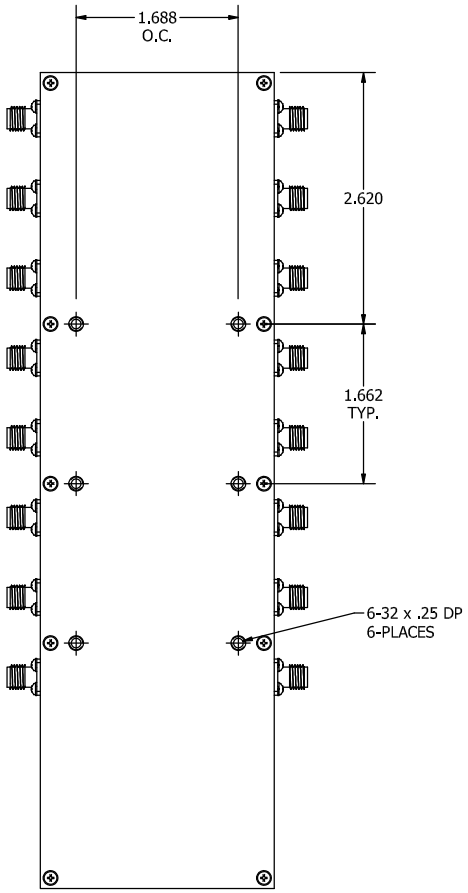

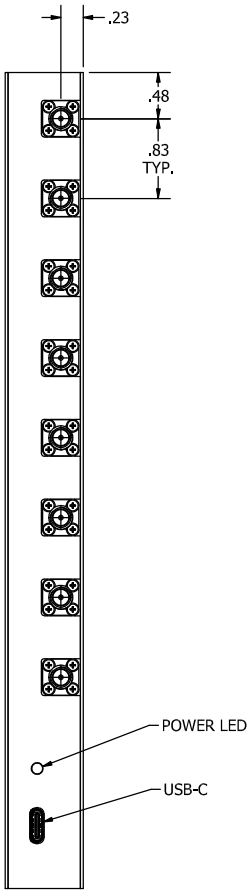

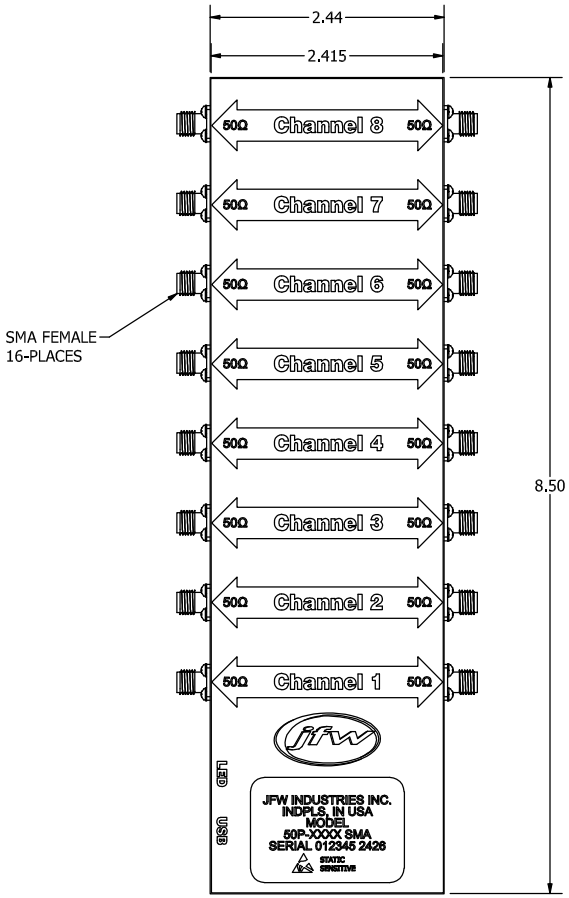

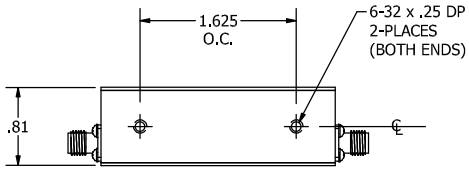

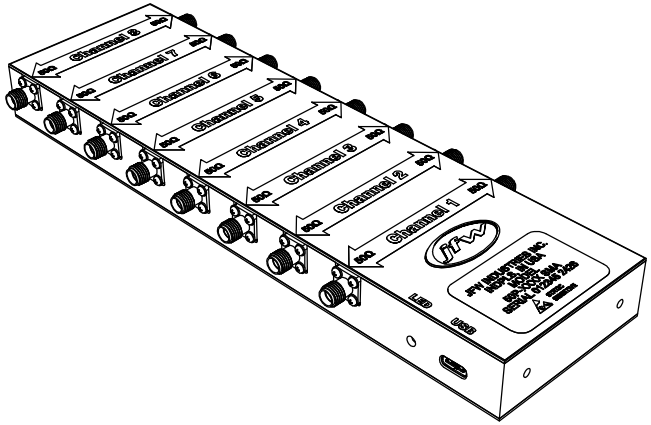

REV	ECN	DATE	BY	APPR
-	ISSUED	7-1-2024	JZ	CLK

JFW INDUSTRIES, INC.

www.jfwindustries.com PH: 317-887-1340

MATERIAL	ALUMINUM ALLOY		PROPRIETARY INFORMATION
FINISH	ELECTROLESS NICKEL		ALL SURFACES ARE TO BE FREE OF BURRS, PITS & SCRATCHES
MODEL	50P-XXXX	SCALE FULL	TOLERANCES .XX±.010 .XXX±.005 .XX°±.5°
DESCRIPTION	8 CHANNEL USB PROGRAMMABLE		DWG # 092-10318